SAMPLING, TESTING AND SPECIAL INSPECTION

1. SAMPLING, TESTING AND SPECIAL INSPECTION SHALL BE IN ACCORDANCE WITH THE 2016 CBC AND THE SPECIFICATIONS. IN CASE OF ANY CONFLICT BETWEEN THE SPECIFICATIONS, DRAWINGS OR THE 2016 CBC, THE MOST RESTRICTIVE PROVISIONS WILL APPLY.

2. REFER TO THE 2016 CBC FOR ELEMENTS OF CONSTRUCTION THAT REQUIRE EITHER PERIODIC OR CONTINUOUS SPECIAL INSPECTION. THE FOLLOWING ELEMENTS OF CONSTRUCTION SHALL REQUIRE SPECIAL INSPECTION ACCORDANCE WITH THE 2016 CBC AND THE SPECIFICATIONS:

   A. Structural Steel (CBC 1704.3)
      i) Continuous Inspection
         a) Pretensioned and slip-critical joints using turn-of-the nut without matchmarking or calibrated wrench methods of installation
         b) CJP and Partial Penetration groove welds
         c) Multipass fillet welds
         d) Single pass fillet welds > 5/16"
         e) Plug and slot welds
      ii) Periodic Inspection
         a) Identification markings to conform to ASTM standards specified in the approved construction documents
         b) Manufacturer's certificate of compliance
         c) Snug-tight joints
         d) Pretensioned and slip-critical joints using turn-of-the nut with matchmarking, twist-off bolts, or direct tension indicator methods of installation
         e) Identification markings to conform to AISC 360
         f) Manufacturer's certified test reports for structural steel
         g) Identification markings to conform to AWS specification in the approved construction documents
         h) Manufacturer's certified test reports for weld filler material
         i) Single pass fillet welds < 5/16"
         j) Roof deck welds
         k) Verification of reinforcing steel other than ASTM A706
         l) Other reinforcing steel
         m) Suspended Ceilings

   B. Cast-in-place Concrete (CBC 1704.4)
      i) Continuous Inspection
         a) Inspection of bolts to be installed in concrete prior to and during the placement of concrete
         b) At the time fresh concrete is sampled to fabricate specimens for strength tests, perform slump and air content tests, and determine the temperature of the concrete
         c) Inspection of concrete and placement for proper application techniques
      ii) Periodic Inspection
         a) Inspection of reinforcing steel, including, and placement.
         b) Inspection of anchors installed in hardened concrete.
         c) Verifying use of required design mix
         d) Inspection for maintenance of specified curing temperatures and techniques.
         e) Inspect formwork for shape, location and dimension of the concrete member being formed.

   C. Masonry (CBC 1704.5)
      i) Continuous Inspection
         a) Verification of slump flow and VSI as delivered to the site for the self-consolidating grout
         b) Welding of reinforcing bars
      ii) Periodic Inspection
         a) Compliance with the required inspection provisions of the contstruction documents and the approved submittal shall be verified
         b) Verification of f'm prior to construction except where specifically exempted by code
         c) Ensure compliance with proportions of site-prepared mortar, construction of mortar joints, and location of reinforcement, connectors and anchorage.
         d) Verify size and location of structural elements
         e) Verify type, size, and location of anchors, including other details of anchorage of masonry to structural members, frames or other construction
         f) Verify specified size, grade, and type of reinforcement , anchor bolts, and anchorages
         g) Verify preparation, construction, and protection of masonry during cold weather (below 40 deg F) and hot weather (above 90 deg F)
         h) Prior to grouting, ensure grout space is clean
         i) Prior to grouting, verify placement of reinforcing and connectors.
         j) Preparation of any required grout specimens, mortar specimens, and/or prisms shall be observed.

   D. Soils (CBC 1704.7)
      i) Continuous Inspection
         a) Verify use of proper materials, densities, and lift thicknesses during placement and compaction of compacted fill
      ii) Periodic Inspection
         a) Verify material below shallow foundations are adequate to achieve design bearing capacity
         b) Verify excavations are extended to the proper depth and have reached proper material
         c) Perofrm classification and testing of the compacted fill materials
         d) Prior to placement of compacted fill, observe subgrade and verify that site has been prepared properly

3. CONTRACTOR SHALL PREPARE & SUBMIT A STATEMENT OF RESPONSIBILITY IN ACCORDANCE WITH CBC 1709.

4. TESTING & INSPECTION OF POST-INSTALLED EXPANSION (WEDGE) ANCHORS SHALL BE AS REQUIRED BY 8/S0.02.

5. TESTING & INSPECTION OF POST-INSTALLED ADHESIVE (EPOXY) ANCHORS SHALL BE PROVIDED AS FOLLOWS:

   A. TEST LOAD: AS INDICATED ON DRAWINGS
   B. TEST FREQUENCY:
      (i) - SILL BOLT APPLICATIONS - 10%
      (ii) - NON-STRUCTURAL APPLICATIONS - 50%
      (iii) - ALL OTHER STRUCTURAL APPLICATIONS - 100%
   C. TEST METHOD: AS REQUIRED BY ICC ESR OR ENFORCEMENT AGENCY.

W. 3RD AND CIVIC CENTER DR.
PROJECT ADDRESS: BEVERLY HILLS, CA 90210 PERMIT APPL. NO.:

Owner: Architect: Engineer: KIM CARAVALHO (LIC# SE-4896)

STRUCTURAL OBSERVATION/ SIGNIFICANT CONSTRUCTION STAGES
(only checked items are required)

Firm or Individual to be responsible for the Structural Observation:

Name: Phone: ( ) Calif. Registration:

FOUNDATION	WALL	FRAME	DIAPHRAGM
■ Footing, Stem Walls, Piers	□ Concrete	□ Steel Moment Frame	□ Concrete
□ Mat Foundation	■ Masonry	□ Steel Braced Frame	■ Steel Deck
□ Caisson, Piles, Grade Beams	□ Wood	□ Concrete Moment Frame	□ Wood
□ Stepp g/Retain g Foundation, Hillside Special Anchors	□ Others:	□ Masonry Wall Frame	□ Others:
□ Others:		■ Others: Steel Canopy Frame	

DECLARATION BY OWNER
I, the Owner of the project, declare that the above listed firm or individual is hired by me to be the Structural Observer.

Signature Date

DECLARATION BY ARCHITECT OR ENGINEER OF RECORD (required if the Structural Observer is different from the Architect or Engineer of Record)
I, the Architect or Engineer of record for the project, declare that the above listed firm or individual is
designated by me to be responsible for the Structural Observation.

Signature License No. Date

IN/Form.08 (Part 2) (Rev. 1/1/2007) www.ladbs.org

GENERAL NOTES FOR STRUCTURAL OBSERVATION

(1) STRUCTURAL OBSERVATION IS REQUIRED FOR THE STRUCTURAL SYSTEM IN ACCORDANCE WITH THE CBC 1710.1 STRUCTURAL OBSERVATION IS THE VISUAL OBSERVATION AT THE CONSTRUCTION SITE OF THE ELEMENTS AND CONNECTIONS OF THE STRUCTURAL SYSTEM AT SIGNIFICANT CONSTRUCTION STAGES AND THE COMPLETE STRUCTURE FOR GENERAL CONFORMANCE TO THE APPROVED PLANS AND SPECIFICATIONS. STRUCTURAL OBSERVATION DOES NOT WAIVE THE RESPONSIBILITY FOR THE INSPECTIONS REQUIRED OF THE BUILDING INSPECTOR OR THE DEPUTY INSPECTOR.

(2) THE OWNER SHALL EMPLOY A STATE OF CALIFORNIA REGISTERED CIVIL OR STRUCTURAL ENGINEER OR LICENSED ARCHITECT TO PERFORM THE STRUCTURAL OBSERVATION. THE DEPARTMENT OF BUILDING AND SAFETY RECOMMENDS THE USE OF THE ENGINEER OR ARCHITECT RESPONSIBLE FOR THE STRUCTURAL DESIGN WHO ARE INDEPENDENT OF THE CONTRACTOR.

(3) THE STRUCTURAL OBSERVER SHALL PROVIDE EVIDENCE OF EMPLOYMENT BY THE OWNER OR THE OWNER'S REPRESENTATIVE. A LETTER FROM THE OWNER, THE OWNER'S REPRESENTATIVE, OR A COPY OF THE AGREEMENT FOR SERVICES SHALL BE SENT TO THE BUILDING INSPECTOR BEFORE THE FIRST SITE VISIT.

(4) THE OWNER OR OWNER'S REPRESENTATIVE SHALL COORDINATE AND CALL FOR A MEETING BETWEEN THE ENGINEER OR ARCHITECT RESPONSIBLE FOR THE STRUCTURAL DESIGN, STRUCTURAL OBSERVER, CONTRACTOR, AFFECTED SUBCONTRACTORS AND DEPUTY INSPECTORS. THE PURPOSE OF THE MEETING SHALL BE TO IDENTIFY THE MAJOR STRUCTURAL ELEMENTS AND CONNECTIONS THAT AFFECT THE VERTICAL AND LATERAL LOAD SYSTEMS OF THE STRUCTURE AND TO REVIEW SCHEDULING OF THE REQUIRED OBSERVATIONS. A RECORD OF THE MEETING SHALL BE INCLUDED IN THE FIRST OBSERVATION REPORT SUBMITTED TO THE BUILDING INSPECTOR.

(5) THE STRUCTURAL OBSERVER SHALL PERFORM SITE VISITS AT THOSE STEPS IN THE PROGRESS OF THE WORK THAT ALLOW FOR CORRECTION OF DEFICIENCIES WITHOUT SUBSTANTIAL EFFORT OR UNCOVERING OF THE WORK INVOLVED. AT A MINIMUM, THE LISTED SIGNIFICANT CONSTRUCTION STAGES ON THE FOLLOWING STRUCTURAL OBSERVATION/SIGNIFICANT CONSTRUCTION STAGES TABLE REQUIRE A SITE VISIT AND AN OBSERVATION REPORT FROM THE STRUCTURAL OBSERVER.

(6) THE STRUCTURAL OBSERVER SHALL PREPARE A REPORT OF THE STRUCTURAL OBSERVATION REPORT FORM FOR EACH SIGNIFICANT STAGE OF CONSTRUCTION OBSERVED. THE ORIGINAL OF THE STRUCTURAL OBSERVATION REPORT SHALL BE SENT TO THE BUILDING INSPECTOR'S OFFICE AND SHALL BE SIGNED AND SEALED (WET STAMP) BY THE RESPONSIBLE STRUCTURAL OBSERVER. ONE COPY OF THE OBSERVATION REPORT SHALL BE ATTACHED TO THE APPROVED PLANS. THE COPY ATTACHED TO THE PLANS SHALL BE SIGNED AND SEALED (WET STAMP) BY THE RESPONSIBLE STRUCTURAL OBSERVER OR THEIR DESIGNEE. COPIES OF THE REPORT SHALL ALSO BE GIVEN TO THE OWNER, CONTRACTOR, AND DEPUTY INSPECTOR. ANY DEFICIENCY NOTED ON THE OBSERVATION REPORT WILL BECOME THE RESPONSIBILITY OF THE STRUCTURAL ENGINEER OF RECORD TO VERIFY ITS COMPLETION BY HIM (HER), OR BY A REGISTERED DEPUTY INSPECTOR AT THE DISCRETION OF THE STRUCTURAL OBSERVER.

(7) A FINAL OBSERVATION REPORT AND THAT OF THE REGISTERED DEPUTY INSPECTOR MUST BE SUBMITTED WHICH SHOWS THAT ALL OBSERVED DEFICIENCIES WERE RESOLVED AND STRUCTURAL SYSTEM GENERALLY CONFORMS WITH THE APPROVED PLANS AND SPECIFICATIONS. THE DEPARTMENT OF BUILDING AND SAFETY WILL NOT ACCEPT THE STRUCTURAL WORK WITHOUT THIS FINAL OBSERVATION REPORT AND THAT OF THE REGISTERED DEPUTY INSPECTOR (WHEN PROVIDED) AND THE CORRECTION OF SPECIFIC DEFICIENCIES NOTED DURING NORMAL BUILDING INSPECTION.

(8) THE STRUCTURAL OBSERVER SHALL PROVIDE THE ORIGINAL STAMPED AND SIGNED STRUCTURAL OBSERVATION REPORT TO THE CITY OF BEVERLY HILLS DEPARTMENT OF BUILDING AND SAFETY BUILDING INSPECTOR.

(9) WHEN THE OWNER ELECTS TO CHANGE THE STRUCTURAL OBSERVER OF RECORD, THE OWNER SHALL:

A) NOTIFY THE BUILDING INSPECTOR IN WRITING BEFORE THE NEXT INSPECTION BY SUBMITTING COMPLETED "STRUCTURAL OBSERVATION PROGRAM AND DESIGNATION OF THE STRUCTURAL OBSERVER"
B) CALL AN ADDITIONAL PRECONSTRUCTION MEETING, AND
C) FURNISH THE REPLACEMENT STRUCTURAL OBSERVER WITH A COPY OF ALL PREVIOUS OBSERVATION REPORTS. THE REPLACEMENT STRUCTURAL OBSERVER SHALL APPROVE THE CORRECTION OF THE ORIGINAL OBSERVED DEFICIENCIES UNLESS OTHERWISE APPROVED BY PLAN CHECK SUPERVISION. THE POLICY OF THE DEPARTMENT SHALL BE TO CORRECT ANY PROPERTY NOTED DEFICIENCIES WITHOUT CONSIDERATION OF THEIR SOURCE.

(10) THE ENGINEER OR ARCHITECT OF RECORD SHALL DEVELOP ALL CHANGES RELATING TO THE STRUCTURAL SYSTEMS. THE BUILDING DEPARTMENT SHALL REVIEW AND APPROVE ALL CHANGES TO THE APPROVED PLANS AND SPECIFICATIONS.

STRUCTURAL & MISCELLANEOUS STEEL:

1. STRUCTURAL STEEL SHALL COMPLY WITH THE FOLLOWING ASTM STANDARDS, U.N.O.:

WIDE FLANGE:	A992
PLATES & MISCELLANEOUS STEEL:	A572 GR 50
ANGLE & CHANNELS:	A36
HSS SHAPES:	A500 GR B
PIPES:	A53 GR B
THREADED RODS:	A36
ANCHOR BOLTS:	F1554 GR. 55
MACHINE BOLTS:	A307
HIGH STRENGTH BOLTS:	A325N

2. ALL MATERIAL, FABRICATION AND CONSTRUCTION SHALL BE IN ACCORDANCE WITH THE LATEST A.I.S.C. SPECIFICATIONS. THE FABRICATOR SHALL BE LICENSED BY AISC OR CITY OF LOS ANGELES CERTIFIED.

3. SHOP DRAWINGS SHALL BE SUBMITTED FOR REVIEW PRIOR TO FABRICATION, SEE THE SPECIFICATIONS FOR OTHER REQUIREMENTS.

4. ALL WELDERS SHALL BE CERTIFIED BY THE GOVERNING JURISDICTION LICENSE AND ALL SHALL HAVE IN HIS/HER POSSESSION AWS D1.1, D1.5 OR B2.1 (UNLIMITED THICKNESS, ALL POSITION QUALIFICATIONS). PROVIDE INSPECTION OF WELDING AS REQUIRED BY SAMPLING, TESTING AND SPECIAL INSPECTION NOTES OR THE SPECIFICATIONS, WHICHEVER IS MORE STRINGENT. WELDING SHALL CONFORM TO THE LATEST EDITION OF A.W.S. D1.1. SUBMIT WELDING PROCEDURE SPECIFICATIONS (W.P.S.) FOR ALL WELDS. ALL W.P.S.s SHALL HAVE THE WELD LOCATION OR DETAIL REFERENCED CLEARLY NOTED. ELECTRODES SHALL HAVE A MINIMUM CHARPY VEE NOTCH (CVN) TOUGHNESS OF 20 FT. LBS. AT 0°F. DO NOT INTERMIX WELDS. W.P.S.s ARE REQUIRED TO BE REVIEWED AND APPROVED BY AN AWS CERTIFIED INSPECTOR AND/OR LICENSED CIVIL ENGINEER WITH THE STATE OF CALIFORNIA EMPLOYED BY THE QUALITY ASSURANCE AGENCY, PRIOR TO SUBMISSION FOR REVIEW BY THE ARCH. AND SEOR.

5. BOLTS SHALL BE HIGH STRENGTH BOLTS CONFORMING TO A.S.T.M. A-325 UNLESS NOTED OTHERWISE. TYPICAL HIGH STRENGTH BOLT JOINTS SHALL BE SLIP CRITICAL WITH A CLASS A FAYING SURFACE UNLESS NOTED OTHERWISE. INSTALLATION OF HIGH STRENGTH BOLTS SHALL CONFORM TO "THE SPECIFICATIONS FOR STRUCTURAL JOINTS USING A.S.T.M. A-325 OR A-490 BOLTS", AND SHALL HAVE CONTINUOUS INSPECTION.

6. BOLTED JOINTS AT ELEMENTS OF THE SLRS SHALL BE SLIP CRITICAL JOINTS UNLESS NOTED OTHERWISE. ALL FAYING SURFACES SHALL COMPLY WITH CLASS A PER ASTM A-325 OR A-490 BOLTS.

7. FILLET WELDS NOTED ARE FOR DESIGN LOADS. FOR WELDS TO HEAVIER SECTIONS USE PREHEAT OR INCREASE WELD SIZE PER AISC SPECIFICATIONS.

8. ALL CJP GROOVE WELDS SHALL BE ULTRASONICALLY INSPECTED IN MATERIALS 5/16" THICK OR GREATER. MAGNETIC PARTICLE TESTING SHALL BE PERFORMED ON 25% OF ALL BEAM-TO-COLUMN CJP GROOVE WELDS.

9. AT SLRS ELEMENTS, MAGNETIC PARTICLE TEST (OR DYE PENETRANT) 10% MIN. OF SHOP FILLET WELD AND PARTIAL PENETRATION WELDS. VISUAL INSPECTION SHALL CONFORM TO REQUIREMENTS OF THE LATEST EDITIONS OF A.W.S. D1.1 AND D1.8.

10. ALL STEEL ELEMENTS TO BE PRE PRIMED FOR PAINT.

11. ALL EXPOSED STRUCTURAL STEEL SHALL BE ARCHITECTURAL EXPOSED STRUCTURAL STEEL.

METAL DECKING:

1. REFER TO STEEL DECK SPECIFICATIONS FOR ADDITIONAL INFORMATION.

2. CONTRACTOR SHALL CUT DECK TO SUIT DETAILS AT ALL FRAMED OPENINGS. COLUMNS, COLUMN CONNECTIONS, AND AS INDICATED ON THE DRAWINGS. CLOSURE AT DECK END SHALL CLOSE OFF OPEN FLUTES ONLY. (I.E. NOT CONTINUOUS)

3. THE OPENINGS SHOWN ON THE FRAMING PLANS INDICATE THE GENERAL ARRANGEMENT AND LOCATION ONLY. VERIFY CUTTING LENGTH OF DECK WITH ARCHITECTURAL, ELECTRICAL AND MECHANICAL DRAWINGS.

4. ALL WELDERS SHALL BE CERTIFIED FOR LIGHT GAGE STEEL WELDING. ELECTRODES SHALL BE LOW HYDROGEN. WELDING PROCEDURE SPECIFICATIONS ARE TO BE SUBMITTED FOR REVIEW AND APPROVAL PRIOR TO THE WORK BEING CARRIED OUT. WELDING SHALL COMPLY WITH A.WS D1.1 & D1.3.

5. CONTINUOUS & PERIODIC INSPECTION BY A SPECIAL INSPECTOR SHALL BE PROVIDED AS REQUIRED B SAMPLING, TESTING & SPECIAL INSPECTION NOTES OR THE SPECIFICATION, WHICHEVER IS MORE STRINGENT.

6. THE EFFECTIVE AREA OF A 3/4" PLUG WELD SHALL NOT BE LESS THAN 1/2"DIA..

7. ALL LIGHT GAGE STEEL DECKING AND FLASHING SHALL BE FABRICATED OF SHEET METAL CONFORMING TO A.S.T.M. A-446, G60 .

8. EDGE OF PERIMETER CLOSURE SHALL BE HELD WITHIN ± 1/2" OF THE DIMENSIONS REQUIRED ON THE ARCHITECTURAL DRAWINGS. CONFIRM THE LOCATION OF WALL OR BEAM AND COLUMN CENTER LINES FROM FIXED REFERENCE EDGE LINES.

9. DECK TO BEAR ON SUPPORTS 2" MIN.

CONCRETE:

1. CONCRETE SHALL HAVE A MINIMUM COMPRESSIVE STRENGTH AT 28 DAYS SHALL BE AS INDICATED ON CONCRETE SCHEDULE ON 10 / S0.02.
2. LOCATION OF ALL CONSTRUCTION JOINTS SHALL BE APPROVED BY THE STRUCTURAL ENGINEER.
3. NO PIPES OR DUCTS SHALL BE PLACED IN STRUCTURAL CONCRETE UNLESS SPECIFICALLY DETAILED ON STRUCTURAL DRAWINGS. SEE MECHANICAL AND/OR ELECTRICAL DRAWINGS FOR LOCATION OF SLEEVES THROUGH WALL AND FLOORS.
4. REFER TO ARCHITECT'S DETAILED DRAWINGS FOR ALL MOULDS, GROOVES, CLIPS, GROUNDS, ORNAMENTS AND OTHER INSERTS OR STEEL ANGLES TO BE CAST IN CONCRETE.
5. ALL REINFORCING STEEL DOWELS, ANCHOR BOLTS, AND OTHER INSERTS SHALL BE SECURED IN POSITION PRIOR TO POURING OF CONCRETE.
6. ALL CONCRETE SHALL BE ROCK CONCRETE CONFORMING TO A.S.T.M. C-33, MAXIMUM SIZE AGGREGATES SHALL BE AS INDICATED ON 10/S0.02.
7. CONTINUOUS INSPECTION SHALL BE REQUIRED DURING PLACING OF CONCRETE.
8. THE QUANTITIES OF MATERIALS SHALL BE CERTIFIED BY A LICENSED WEIGHT-MASTER AND SUBMIT COPIES OF WEIGHTMASTER CERTIFICATE. BATCHPLANT INSPECTION IS REQUIRED.
9. RETAIN AN APPROVED TESTING LABORATORY, ACCEPTABLE TO THE OWNER, TO PREPARE CONCRETE MIX DESIGNS ACCORDING TO GOVERNING CODE.
   A. SUBMIT TO THE ARCHITECT RECORD COPIES OF EACH MIX DESIGN SIGNED BY A CALIFORNIA REGISTERED CIVIL ENGINEER.
   B. NEW MIX DESIGNS ARE REQUIRED WHEN THERE IS A CHANGE IN MATERIALS BEING USED.
   C. MIX DESIGNS SHALL CLEARLY STATE THE LOCATION/AREAS FOR USE.
10. FLOOR SHALL BE MONITORED BY TRANSIT LEVEL OR LASER DURING CONCRETE PLACEMENT TO MAINTAIN LEVEL FLOOR TO WITHIN 1/4". FLOOR VARIATION FROM LEVEL SHALL NOT EXCEED 1/4" PER 10 FEET.
11. ALL POUR JOINT SHALL BE ROUGHENED AND BE SANDBLASTED OR CHIPPED TO A FULL AMPLITUDE OF APPROXIMATELY 1/4" U.N.O. THE INTERFACE FOR SHEAR TRANSFER SHALL BE CLEAN & FREE OF LAITANCE.
12. SEE S/S0.02 FOR REBAR SPLICE AND EMBED. REQUIREMENTS.

REINFORCING STEEL:

1. ALL REINFORCING STEEL SHALL BE DEFORMED BARS CONFORMING TO A.S.T.M. A-615 GRADE 60 OR A.S.T.M. A-706. WELDED WIRE FABRIC TO A-185. BARS TO BE WELDED SHALL CONFORM TO A.S.T.M. A-706.
2. DOWELS SHALL BE PROVIDED AT ALL POUR JOINTS AND SHALL BE THE SAME SIZE AND SPACING AS REINFORCING DIRECTLY BEYOND POUR JOINTS, EXCEPT AS OTHERWISE NOTED.
3. UNLESS OTHERWISE NOTED ALL REINFORCING SHALL BE CONTINUOUS. ALL REINFORCING STEEL MAY BE LAPPED AS INDICATED ON THE DRAWINGS. WHERE LAP AND/OR SPLICE LOCATIONS ARE NOT SPECIFICALLY INDICATED, PROVIDE SPLICE PER SCHEDULE ON 5/S0.02.
4. PLACING TOLERANCES AND BAR SUPPORTS SHALL CONFORM TO THE MANUAL OF STANDARD PRACTICE FOR REINFORCED CONCRETE CONSTRUCTION, BY CONCRETE REINFORCING STEEL INSTITUTE.
5. CLEARANCE BETWEEN PARALLEL BARS IN A LAYER SHALL BE NOT LESS THAN 1", NOR 1 BAR DIA., NOR 1 x MAX. AGGREGATE SIZE. BARS IN SECOND LAYER SHALL BE DIRECTLY ABOVE BARS IN FIRST LAYER, MIN. DISTANCE BETWEEN LAYERS = 1".
6. WIRE MESH LAP (END & SIDE) SHALL BE ONE FULL MESH +2".
7. ALL WELDING OF REINFORCING STEEL SHALL BE DONE IN ACCORDANCE WITH THE AWS D1.4. WELDED REINFORCING TO CONFORM TO REQUIREMENTS OF THE CODE. INSPECTION BY A QUALIFIED WELDING INSPECTOR IS REQUIRED.
8. PLACING OF REINFORCING SHALL BE DONE UNDER INSPECTION BY A QUALIFIED SPECIAL INSPECTOR.

GENERAL NOTES:

1. IT IS THE CONTRACTOR'S RESPONSIBILITY TO VERIFY ALL DIMENSIONS AND CONDITIONS AT THE SITE AND TO CROSS- CHECK DETAILS AND DIMENSIONS SHOWN ON THE STRUCTURAL DRAWINGS WITH RELATED REQUIREMENTS ON THE ARCHITECTURAL, MECHANICAL AND ELECTRICAL DRAWINGS. FLOOR AND WALL OPENINGS, SLEEVES, VARIATIONS IN THE STRUCTURAL SLAB ELEVATIONS, AND OTHER ARCHITECTURAL, MECHANICAL, AND ELECTRICAL REQUIREMENTS MUST BE COORDINATED BEFORE THE CONTRACTOR PROCEEDS WITH CONSTRUCTION.
2. THE ARCHITECT WILL INTERPRET THE DOCUMENTS IN CASE OF POSSIBLE CONFLICT OR DISCREPANCY BETWEEN STRUCTURAL AND OTHER DISCIPLINES.
3. DETAILS NOTED AS TYPICAL ON STRUCTURAL SHEETS SHALL APPLY IN ALL CASES UNLESS SPECIFICALLY SHOWN OR NOTED OTHERWISE.
4. WHERE NO SPECIFIC DETAIL IS SHOWN, THE FRAMING OR CONSTRUCTION SHALL BE IDENTICAL OR SIMILAR TO THAT INDICATED FOR LIKE CASES OF CONSTRUCTION ON THIS PROJECT.
5. THE EXACT DEPTH, EXTENT, AND LOCATION OF ALL FLOOR DEPRESSIONS, ELEVATED AREAS, OR OTHER IRREGULARITIES SHALL BE COORDINATED WITH ARCHITECTURAL OR APPLICABLE DRAWINGS. THE STRUCTURAL DRAWINGS DO NOT NECESSARILY INDICATE ALL OF THESE ITEMS.
6. STRUCTURAL PLANS INDICATE ONLY THE APPROXIMATE LOCATION OF MECHANICAL, ELECTRICAL AND OTHER EQUIPMENT, AS WELL AS RELATED AUXILIARY FRAMING NECESSARY TO SUPPORT SUCH GEAR. THE FINAL POSITIONING OF THESE ITEMS IS DEPENDENT UPON THE EQUIPMENT SELECTED. THE CONTRACTOR SHALL BE RESPONSIBLE FOR COORDINATING WORK BETWEEN SUBCONTRACTORS AND CRAFTS IN THIS REGARD, AND PROVIDING NECESSARY DIMENSIONS IN A TIMELY MANNER TO ALL PARTIES AND DETAILERS INVOLVED.
7. WORKMANSHIP AND MATERIALS SHALL CONFORM TO THE REQUIREMENTS OF THE CALIFORNIA BUILDING CODE 2016 EDITION WITH CITY OF BEVERLY HILLS AMENDMENTS.
8. CONTRACTORS FOR STOREFRONT, CURTAIN WALL, ETC. AS APPLICABLE, SHALL SUBMIT STRUCTURAL DESIGN CALCULATIONS AND DRAWINGS FOR FRAMEMEMBERS AND CONNECTIONS TO THE STRUCTURE FOR THE REVIEW AND APPROVAL BY THE ARCHITECT AND STRUCTURAL ENGINEER OF RECORD (SEOR). CONNECTIONS OF THESE ELEMENTS SHALL NOT INDUCE TORSION OR SECONDARY STRESS ON THE STRUCTURAL MEMBERS.
9. THE CONTRACT STRUCTURAL DRAWINGS AND SPECIFICATIONS REPRESENT THE FINISHED STRUCTURE, THEY DO NOT INDICATE THE METHOD OF CONSTRUCTION. THE CONTRACTOR SHALL PROVIDE ALL MEASURES NECESSARY TO PROTECT THE STRUCTURE AND SAFETY OF WORKMEN DURING CONSTRUCTION. SUCH MEASURES SHALL INCLUDE BUT NOT LIMITED TO BRACING OR SHORING FOR CONSTRUCTION LOADS ON FRAMING MEMBERS, OR CANTILEVER MEMBERS OR EQUIPMENT, ETC. OBSERVATION VISITS TO THE SITE BY THE ARCHITECT OR STRUCTURAL ENGINEER SHALL NOT INCLUDE INSPECTIONS OF THE ABOVE ITEMS AND DOES NOT IN ANY WAY RELIEVE THE CONTRACTOR OF HIS RESPONSIBILITIES FOR THE ABOVE.
10. STRUCTURAL DRAWINGS AND SPECIFICATIONS DO NOT INCLUDE NECESSARY COMPONENTS FOR CONSTRUCTION SAFETY.
11. TESTING LABORATORY, EMPLOYED BY THE OWNER, SHALL BE APPROVED BY THE ARCHITECT AND SEOR.
12. THE INSPECTOR OF RECORD EMPLOYED BY THE OWNER, SHALL BE APPROVED BY THE ARCHITECT AND SEOR.
13. DESIGN CRITERIA:

   A. GOVERNING CODE: 2016 CALIFORNIA BUILDING CODE (CBC)

   B. WIND
      V_W = 110 MPH
      I = 1.0
      EXPOSURE 'B'
      GCpi = {+0.18;-0.18}

   C. SEISMIC
      SITE CLASS D
      RISK CATEGORY II
      SEISMIC DESIGN CATEGORY 'E'
      LATERAL ANALYSIS PROCEDURE: EQUIVALENT LATERAL FORCE PROCEDURE

      R = 5.0 (SPECIAL REINFORCED MASONRY SHEAR WALL)
      R = 2.0 (INVERTED PENDULUM TYPE STRUCTURES)
      I_E = 1.0
      S_S = 2.328g S_1 = 0.853g
      F_A = 1.0 F_V = 1.5
      S_{MS} = 2.328g S_{M1} = 1.280g
      S_{DS} = 1.552g S_{D1} = 0.853g

   D. LIVE LOADS
      ROOF: 20 PSF (REDUCIBLE)

14. ALL STEEL EXPOSED TO OUTSIDE AIR SHALL BE GALVANIZED AND ALL FASTENERS SHALL BE CHROMIUM PLATED. METAL DECK EXPOSED TO OUTSIDE AIR SHALL BE G-90.
15. FOUNDATION DESIGN BASED UPON 2016 CBC TABLE 1806.2.

- SOIL TYPE: CONTROLLED COMPACTED FILL, SEE 11/SO.03
- MIN. FOOTING WIDTH = 12" (CONTINUOUS FOOTING) 24" (COLUMN FOOTING)
- MIN. FOOTING EMBEDMENT 18" BELOW LOWEST ADJACENT FINISH GRADE INTO COMPACTED FILL OR UNDISTURBED NATIVE SOIL.
- ALLOWABLE SOIL BEARING PRESSURE: NET ALLOWABLE PRESSURE = 2.000 PSF (DL+LL)
- ALLOWABLE COEFFICIENT OR FRICTION = 0.25
- ALLOWABLE PASSIVE SOIL PRESSURE = 150 PCF.
- WHEN COMBINING PASSIVE AND FRICTION FOR LATERAL RESISTANCE, THE PASSIVE COMPONENT SHOULD BE REDUCED BY ONE-THIRD.

STRUCTURAL OBSERVATION

1. THE STRUCTURAL ENGINEER SHALL PERFORM "STRUCTURAL OBSERVATION" FOR GENERAL CONFORMANCE TO THE APPROVED CONSTRUCTION DOCUMENTS AT SIGNIFICANT CONSTRUCTION STAGES AND AT COMPLETION OF THE STRUCTURAL SYSTEM. THE FOLLOWING SIGNIFICANT CONSTRUCTION STAGES REQUIRE A SITE VISIT AND AN OBSERVATION REPORT FROM THE STRUCTURAL ENGINEER:
   A. THE PLACEMENT OF REINFORCING STEEL BEFORE THE FIRST CONCRETE SPREAD FOOTING POUR. THE PLACEMENT OF EMBEDS AT THE ROOF LEVEL PRIOR TO THE GROUT POUR.
   B. THE PLACEMENT OF STRUCTURAL STEEL AFTER INSTALLATION OF ROOF METAL DECK
2. COPIES OF EACH "STRUCTURAL OBSERVATION" REPORT, STAMPED AND SIGNED BY THE STRUCTURAL ENGINEER (LICENSED IN CALIFORNIA) SHALL BE SENT TO THE ARCHITECT FOR DISTRIBUTION TO THE CONTRACTOR, BUILDING INSPECTOR, AND OWNER.
3. A FINAL "STRUCTURAL OBSERVATION" REPORT WILL BE SENT TO THE ARCHITECT FOR DISTRIBUTION TO THE CONTRACTOR, BUILDING OFFICIAL AND OWNER THAT STATES THAT THE SITE VISITS HAVE BEEN MADE AND REPORT ANY DEFICIENCIES THAT, TO THE BEST OF THE STRUCTURAL OBSERVER'S KNOWLEDGE, HAVE NOT BEEN RESOLVED.

CONCRETE MASONRY UNITS:

CONCRETE BLOCK:	ASTM C90 GRADE N-1 (MEDIUM WEIGHT) SPECIAL INSPECTION REQUIRED f'm = 1500 PSI
GROUT:	f'c = 2000 PSI FOR f'm = 1500 PSI
MORTAR:	f'c = 1800 PSI TYPE S FOR f'm = 1500 PSI

Drawing List

Sheet Number	Sheet Name
S0.01	GENERAL NOTES
S0.02	TYPICAL DETAILS
S0.03	TYPICAL DETAILS
S0.04	TYPICAL CMU & MISC. DETAILS
S0.05	TYPICAL STEEL AND METAL DECK DETAILS
S1.01	RESTROOM FOUNDATION AND ROOF PLANS
S2.11	CANOPY ROOF PLAN AND ELEVATION

SHEET INDEX

GENERAL NOTES

SCALE: N.T.S. 4

PLOT DATE: 30/07/2018

CAD FILE: G:\17\1710234 3RD STREET TOUR BUS CANOPY\DRAWINGS\CAD_SHEETS\S0.01 GENERAL NOTES.DWG

PROJECT:

CITY OF BEVERLY HILLS
3RD STREET TOUR BUS STATION & RESTROOMS
WEST THIRD STREET,
BEVERLY HILLS, CA 90210

OWNER:

CITY OF BEVERLY HILLS
345 FOOTHILL ROAD
BEVERLY HILLS, CA 90210
(T) 310.285.1188

urban-architecture
1657 alvira street second floor los angeles, ca 90035
tel. 323.954.9996 www.u-a-lab.com
© 2016
The design, drawings, and written material in these documents of service are the sole property of Urban Architecture Lab. All design and related information contained herein are for use on the specified projects and shall not be duplicated, disclosed, or used without the prior written consent of Urban Architecture Lab.

PHASE

BID SET
[NOT FOR CONSTRUCTION]
07.12.2018

STAMP:

REGISTERED PROFESSIONAL ENGINEER KIM CARAVALHO No. 4896 STRUCTURAL STATE OF CALIFORNIA

DATE:
FOR BRANDOW & JOHNSTON

BRANDOW & JOHNSTON
STRUCTURAL•CIVIL ENGINEERS (B&J HBK, INC.)
EST. 1945
700 S FLOWER ST #1800, LOS ANGELES, CA 90017
T: (213) 596-4500 WWW.BJSCE.COM

ISSUE NO.	DOCUMENT PACKAGE	ISSUE DATE
1	ADDENDUM #2	07.31.2018

KEY PLAN

N

PROJECT NO. 17006
PLOT DATE 07/31/18
SCALE AS SHOWN

SHEET TITLE

GENERAL NOTES

SHEET NO.

S0.01

CAD REF.

NOTES:

1. BAR SPLICES NOT COVERED BY THIS SCHEDULE ARE SPECIFICALLY DETAILED ON PLANS. THIS TABLE REPRESENTS UNCOATED BARS ONLY.
2. CLASS A SPLICES ARE PERMITTED WHEN THE AREA OF REINFORCEMENT PROVIDED IS AT LEAST TWICE THAT REQUIRED OVER THE ENTIRE LENGTH OF THE SPLICE, AND HALF OR LESS OF THE TOTAL REINFORCEMENT IS SPLICED WITHIN THE REQUIRED LAP LENGTH. IF THE ABOVE REQUIREMENTS ARE NOT MET, USE B SPLICES.
3. FOR TENSION DEVELOPMENT LENGTHS, Ld, USE CLASS A SPLICE LENGTHS.
4. ALL SPLICES SHALL BE CLASS B UNLESS NOTED OTHERWISE ON PLANS.
5. TOP BARS ARE HORIZONTAL REINFORCEMENT WITH MORE THAN 12" OF CONCRETE CAST BELOW BAR.
6. BOTTOM BARS ARE VERTICAL REINFORCEMENT AND HORIZONTAL REINFORCEMENT WITH LESS THAN 12" OF CONCRETE CAST BELOW BAR.
7. FOR LIGHTWEIGHT CONCRETE, ALL LENGTHS IN TABLE ABOVE SHALL BE MULTIPLIED BY 1.3.
8. "COVER" DESIGNATES CLEAR CONCRETE COVER FROM SPLICED BAR TO FACE OF MEMBER. "SPACING" DESIGNATES CENTER-TO-CENTER SPACING OF SPLICED BARS.
9. FOR CONCRETE STRENGTHS (f'c) NOT SHOWN, USE LENGTH BASED ON LOWER CONCRETE STRENGTH.

GRADE 60 REINFORCING BAR TENSION SPLICE LENGTH (INCHES)

REINF. DESCRIPTION AND LOCATION	f'c (PSI)	BAR SIZE / LAP SPLICE CLASS	#4 A	#4 B	#5 A	#5 B	#6 A	#6 B	#7 A	#7 B	#8 A	#8 B	#9 A	#9 B	#10 A	#10 B	#11 A	#11 B
CLEAR SPACING OF BARS BEING DEVELOPED NOT LESS THAN 1db BUT NOT LESS THAN 1" CLEAR COVER NOT LESS THAN 1db, AND STIRRUPS OR TIES THROUGHOUT ld NOT LESS THAN CODE MINIMUM OR CLEAR SPACING OF BARS BEING DEVELOPED NOT LESS THAN 2db AND CLEAR COVER NOT LESS THAN 2db	3000	TOP	29	37	36	47	43	56	63	81	72	93	81	104	91	118	100	131
	3000	BOTT	22	29	28	36	33	43	48	63	55	72	62	81	70	91	78	100
	4000	TOP	25	33	31	41	37	49	54	71	62	81	70	91	79	102	87	113
	4000	BOTT	19	25	24	31	29	37	42	54	48	62	54	70	61	79	67	87
	5000	TOP	23	29	28	36	34	43	49	63	56	72	63	81	70	92	78	101
	5000	BOTT	17	23	22	28	26	34	38	49	43	56	48	63	54	70	60	78
OTHER CASES	3000	TOP	43	56	54	70	65	84	94	121	107	139	120	157	136	176	151	196
	3000	BOTT	33	43	42	54	50	65	72	94	83	107	93	120	104	136	116	151
	4000	TOP	37	49	47	61	56	73	81	105	93	120	104	136	117	153	130	170
	4000	BOTT	29	37	36	47	43	56	63	81	72	93	81	104	91	117	100	130
	5000	TOP	34	43	42	54	50	65	73	95	83	108	94	121	105	137	117	152
	5000	BOTT	26	34	32	42	39	50	56	73	64	83	72	94	81	105	90	117

REBAR SPLICE AND EMBEDMENT SCHEDULE SCALE: N.T.S. 5

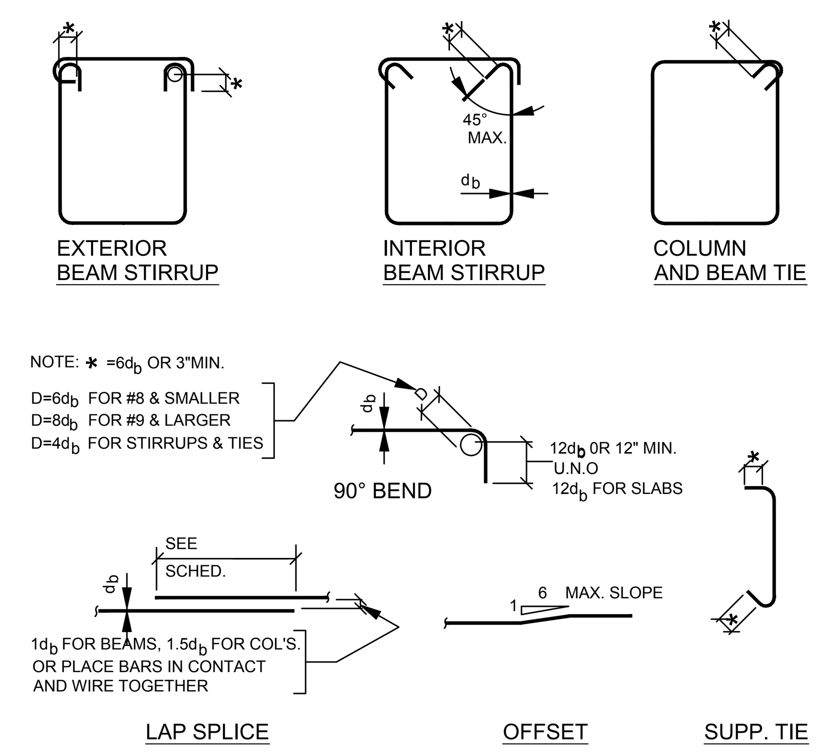

REBAR BENDING AND SPLICE SCALE: N.T.S. 5

MATERIAL STRENGTH/PROPERTIES - SCHEDULE (5)

ITEM	CONCRETE TYPE	CONCRETE STRENGTH (PSI) (1)	REBAR GRADE A-615 GR. 60 (3)	REBAR GRADE A-185 MESH	CONT. INSP. YES	MAX. SLUMP @ APPLICATION POINT (2)	MAX. W/C RATIO	MAX. AGGREGATE SIZE
FOOTINGS	ROCK	3000	∘		∘	4"	0.50	1 1/2"
SLAB-ON-GRADE (4)	ROCK	3000	∘		∘	4"	0.45	1"

NOTES:
(1) AT 28 DAYS
(2) SUBJECT TO USE OF WATER REDUCING ADMIXTURES. MIX DESIGNS SHALL BE BY AN APPROVED LABORATORY AND SHALL BE SUBMITTED FOR APPROVAL TO THE STRUCTURAL ENGINEER.
(3) ASTM A706 SHALL BE USED FOR ALL REINFORCING BARS REQUIRING WELDING.
(4) ALSO APPLIES TO STAIR ON GRADE OR RAMP ON GRADE, U.N.O.
(5) SEE GENERAL NOTES, SHEET S0.01.

CONC. MATERIAL PROPERTIES SCHEDULE SCALE: N.T.S. 10

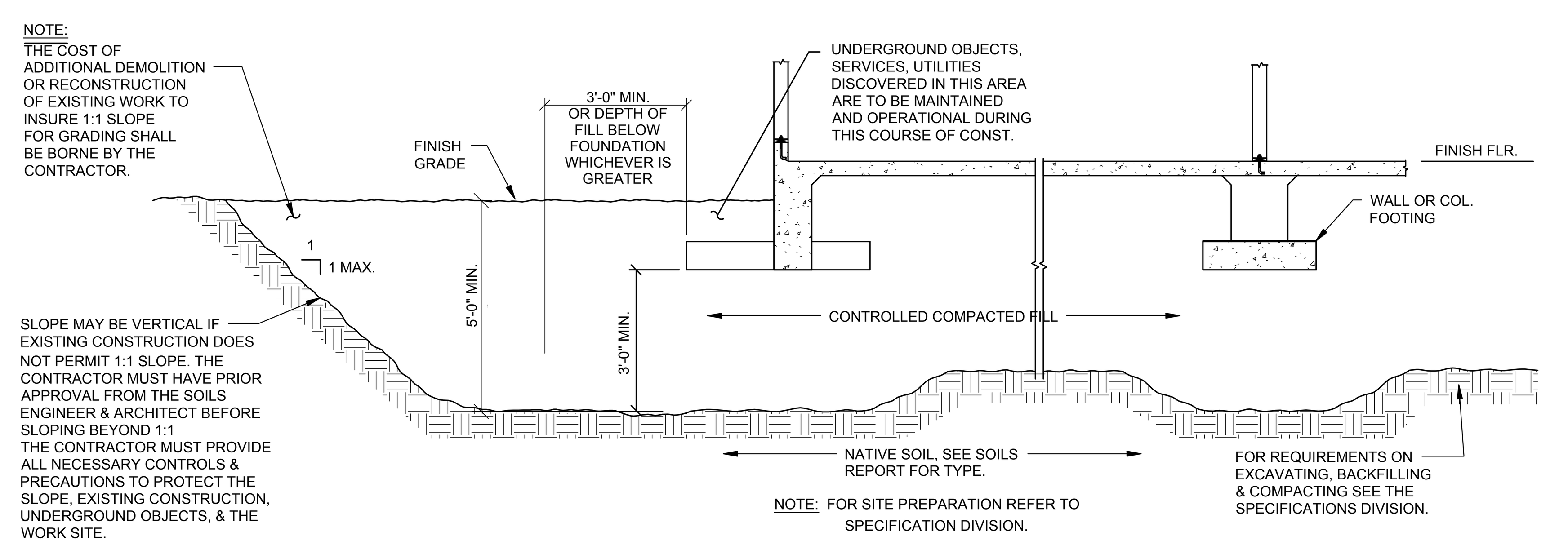

DIAGRAMATIC EARTHWORK EXCAVATION SCALE: N.T.S. 11

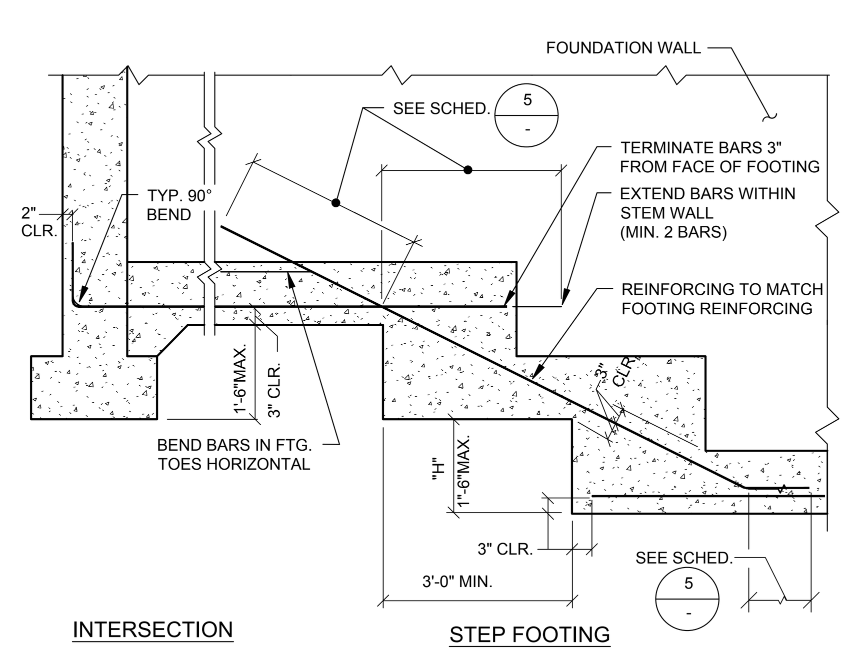

STEPPED WALL FOOTING SCALE: N.T.S. 16

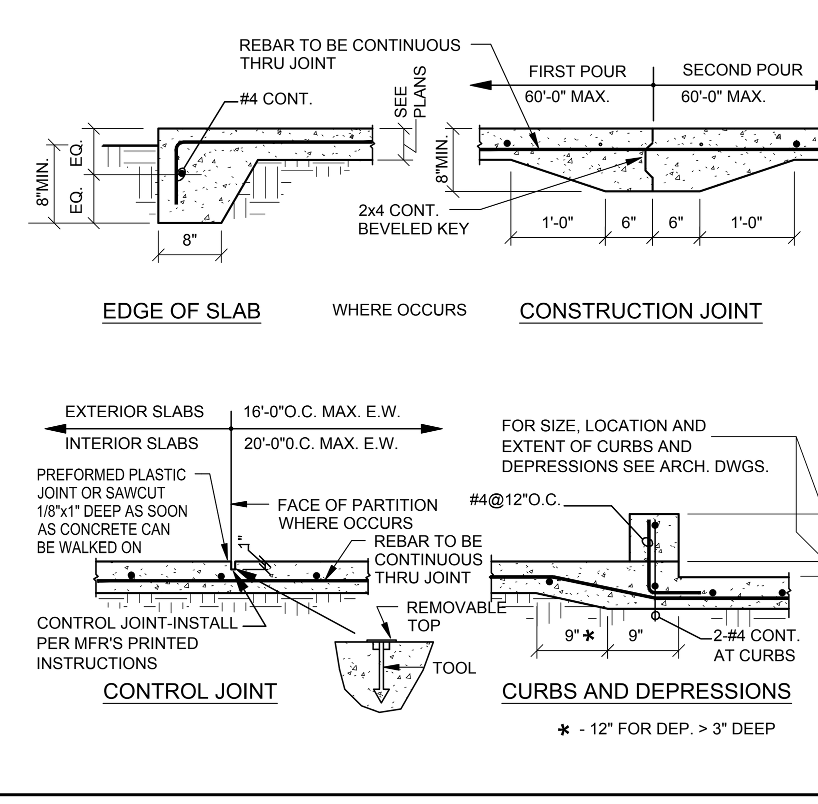

SLAB-ON-GRADE SCALE: N.T.S. 12

BOLT DIA. Ø	1/2"	5/8"	3/4"	7/8"	1"
MIN. EMBED.	4"	5"	6"	7"	7"

CAST-IN-PLACE BOLT SCHEDULE

TYPICAL CARBON STEEL WEDGE ANCHOR INSTALLATION DESIGN AND TEST VALUES

BOLT DIAMETER	3/8"	1/2"		5/8"		3/4"	
MIN. EMBEDMENT	2"	2"	3-1/4"	3-1/8"	4"	3-3/4"	4-3/4"
MIN. HOLE DEPTH	2-5/8"	2-5/8"	4"	3-7/8"	4-3/4"	4-5/8"	5-3/4"
MIN. MEMBER THICKNESS *	4"	4"	6"	5"	6"	6"	8"
INSTALLATION TORQUE	25 FT-LBS	40 FT-LBS		60 FT-LBS		110 FT-LBS	

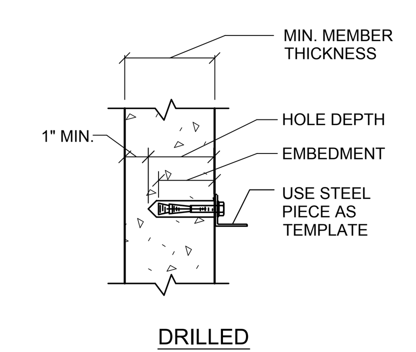

DRILLED

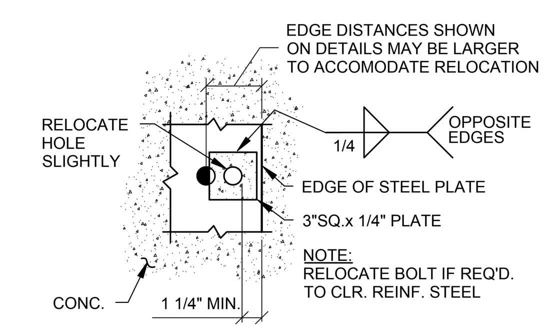

WEDGE ANCHOR RELOCATION DETAIL

* NOT APPLICABLE TO INSTALLATION INTO UNDERSIDE OF CONCRETE FILL OVER METAL DECK

INSTALLATION:

1. ALLOWABLE ANCHOR TYPES: HILTI KWIK BOLT TZ (ICC-ES ESR-1917).
2. U.N.O. INSTALL ANCHORS PER MANUFACTURER'S RECOMMENDED SPECIFICATIONS.
3. THE TABULATED INSTALLATION AND TEST VALUES PERTAIN TO USE IN HARDROCK CONRETE, LIGHT-WEIGHT CONCRETE AND CONCRETE FILL OVER METAL DECK. CONCRETE FILL OVER METAL DECK SHALL CONSIST OF 20 GA. MIN. METAL DECK WITH EITHER HARD ROCK OR LIGHT WEIGHT CONCRETE. CONCRETE SHALL HAVE A MINIMUM STRENGTH OF 3000 P.S.I.
4. WHEN INSTALLING DRILLED-IN ANCHORS IN NON-PRESTRESSED REINFORCED CONCRETE, USE CARE AND CAUTION TO AVOID CUTTING OR DAMAGING THE REINFORCING BARS OR OTHER EMBEDDED ITEMS SUCH AS ELECTRICAL/TELECOMMUNICATIONS CONDUIT AND GAS LINES. WHEN INSTALLING DRILLED-IN ANCHORS INTO PRESTRESSED CONCRETE (PRE- OR POST-TENSIONED), LOCATE TENDONS DURING INSTALLATION. MAINTAIN A MINIMUM CLEARANCE OF ONE INCH BETWEEN THE REINFORCEMENT AND THE DRILLED-IN ANCHOR.
5. DRILLED EXPANSION TYPE ANCHOR BOLTS SHALL BE USED ONLY WHERE DETAILED OR FOR ATTACHMENT OF MECH., ELEC., OR MISC. ACCESSORIES OR EQUIPMENT TO THE STRUCTURE.
6. WHERE EDGE DISTANCE AND SPACING IS NOT SHOWN ON DETAILS, REFER TO ICC-ES ESR-1912 FOR MINIMUM VALUES.

INSPECTION:

1. ALL WORK SHALL BE INSTALLED UNDER CONTINUOUS INSPECTION BY SPECIAL INSPECTOR.

TORQUE TEST:

1. TEST INSTALLED ANCHORS AT A RATE OF 100% IN THE PRESENCE OF INSPECTOR OF RECORD. (I.O.R.)
2. ALL CONCRETE ANCHOR BOLTS OF THE EXPANSION TYPE (LOADED IN EITHER PULLOUT OR SHEAR) SHALL BE TORQUED AS NOTED IN THE DRILLED BOLT SCHEDULE. TORQUED BOLTS SHALL BE RETESTED A MINIMUM OF 24 HOURS LATER AND SHALL NOT HAVE MORE THAN 1/2 TURN OF THE NUT. THE RATE OF TESTING MAY BE REDUCED SUBJECT TO NO FAILURES OCCURING AND APPROVAL BY THE STRUCTURAL ENGINEER OF RECORD.
3. WHERE ANCHORS FAIL TESTING, REPLACE DEFICIENT ANCHORS AND RETEST. ASSOCIATED COSTS SHALL BE BORNE BY THE CONTRACTOR.

ANCHOR BOLTS SCALE: N.T.S. 8

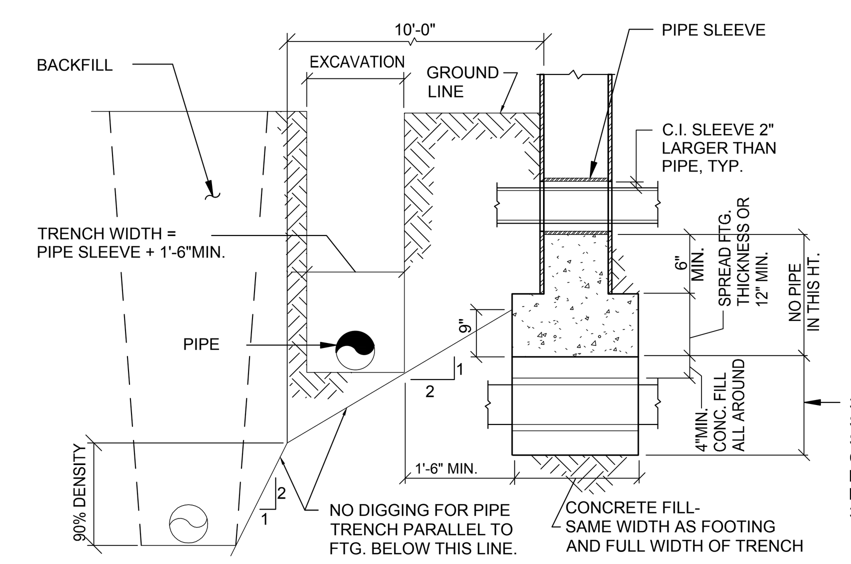

NOTE:
1. CONCRETE FILL TO BE MADE BEFORE FOOTING IS POURED.
2. PIPES MORE THAN 3'-0" BELOW BOTTOM OF FOOTING TRENCH MAY BE BACKFILLED WITH CONTROLLED, COMPACTED FILL.

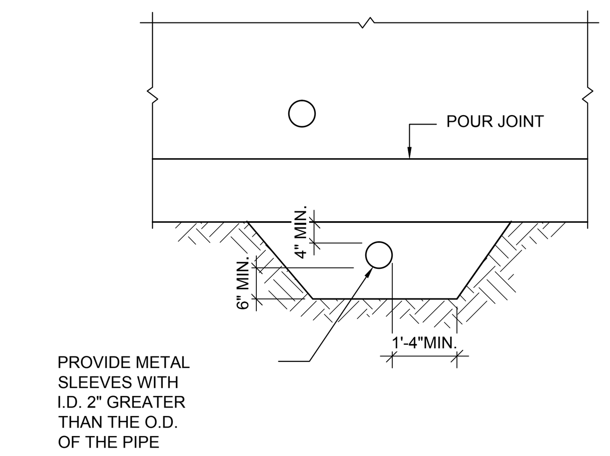

PIPE AT CONCRETE FOOTINGS SCALE: N.T.S. 2

SCHEDULE B	
MINIMUM CONCRETE COVERAGE OF REBAR- SCHEDULE	
FOOTINGS	3"
FORMED SURFACE IN CONTACT W/EARTH	2"
SLABS	1" U.N.O.
EXTERIOR FACE EXPOSED TO EARTH	1 1/2" #6 & LARGER 2"

CONCRETE COVERAGE SCHEDULE SCALE: N.T.S. 3

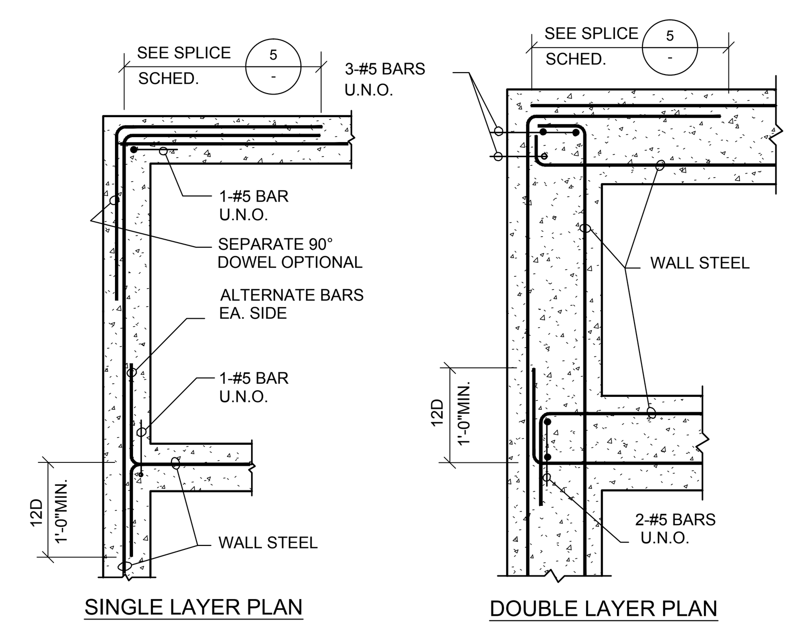

REBARS AT CORNERS & INTERSECTION SCALE: N.T.S. 4

PROJECT:

CITY OF BEVERLY HILLS
3RD STREET TOUR BUS STATION & RESTROOMS
WEST THIRD STREET,
BEVERLY HILLS, CA 90210

OWNER:

CITY OF BEVERLY HILLS
345 FOOTHILL ROAD
BEVERLY HILLS, CA 90210
(T) 310.285.1188

urban-architecture LAB
1657 alvira street second floor los angeles, ca 90035
tel. 323.954.9996 www.u-a-lab.com © 2016

The design, drawings, and written material in these documents of service are the sole property of Urban Architecture Lab. All design and related information contained herein are for use on the specified projects and shall not be duplicated, disclosed, or used without the prior written consent of Urban Architecture Lab.

PHASE

BID SET
[NOT FOR CONSTRUCTION]
07.12.2018

STAMP:

REGISTERED PROFESSIONAL ENGINEER KIM CARAVALHO No. 4896 STRUCTURAL STATE OF CALIFORNIA
DATE:
FOR BRANDOW & JOHNSTON

BRANDOW & JOHNSTON
STRUCTURAL+CIVIL ENGINEERS (B&J HBK, INC.)
700 S FLOWER ST #1800, LOS ANGELES, CA 90017
T: (213) 596-4500 WWW.BJSCE.COM
EST. 1945

ISSUE NO.	DOCUMENT PACKAGE	ISSUE DATE
1	ADDENDUM #2	07.31.2018

KEY PLAN

N

PROJECT NO.	17006
PLOT DATE	07/31/18
SCALE	AS SHOWN

SHEET TITLE

TYPICAL DETAILS

SHEET NO.

S0.02

CAD REF.

PLOT DATE: 30/07/2018

CAD FILE: G:\17\1710234 3RD STREET TOUR BUS CANOPY\DRAWINGS\CAD_SHEETS\S0.02 TYPICAL DETAILS.DWG

REBAR SPLICE & EMBED AT CMU WALL — SCALE: 3/4"=1'-0" — 13

BAR SIZE	LAP SPLICE
#5	38"
#4	32"
#3	24"

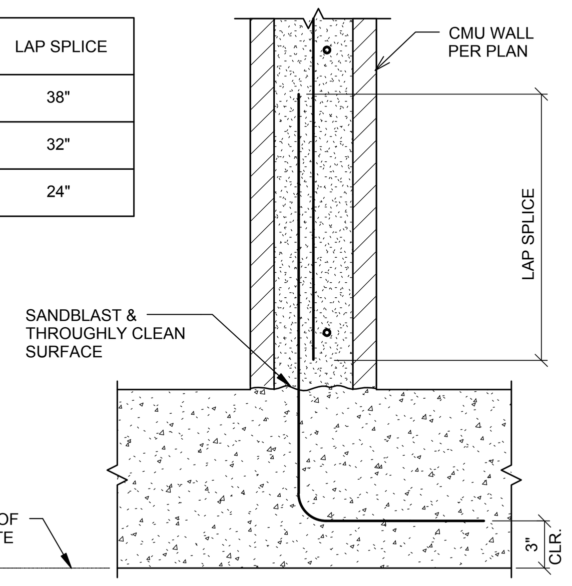

DETAIL — SCALE: 3/4"=1'-0" — 9

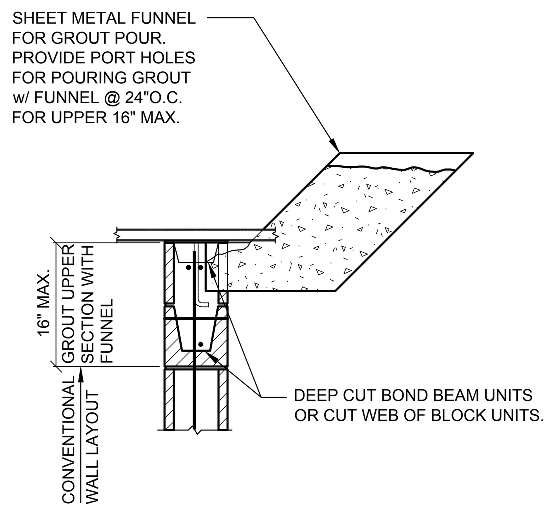

TYPICAL FOOTING DETAIL AT CMU — SCALE: 3/4"=1'-0" — 1

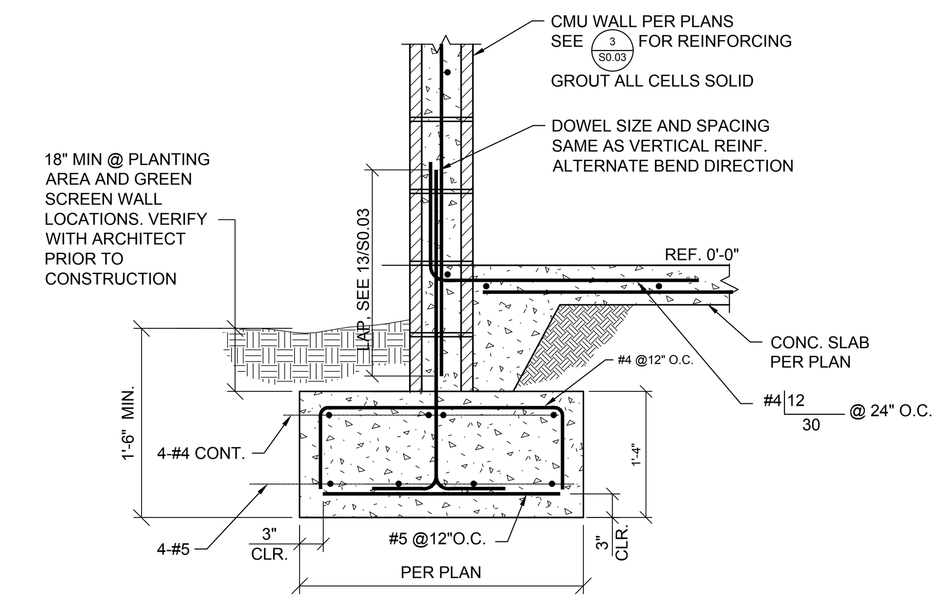

SMALL OPENING REINFORCING DETAIL — SCALE: N.T.S. — 14

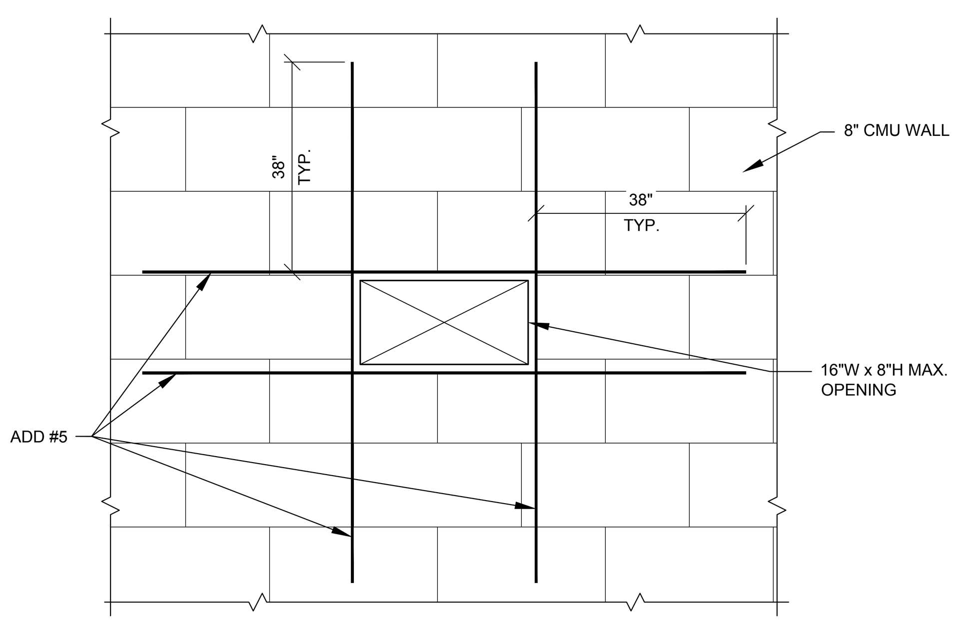

TYPICAL CONDUIT IN MASONRY WALL DETAIL — SCALE: 1"=1'-0" — 11

NOTES:
1. 1" O.D. MAX. AT 8" CMU WALLS
2. ONLY STEEL OR PVC. ALUMINUM CONDUITS ARE RESTRICTED FROM USE.
3. CONDUITS SHALL NOT BE ALLOWED IN ANY OF THE FOLLOWING CONDITIONS.
   A. ANY VERTICAL CELL CONTAINING REINFORCING.
   B. WITHIN 6" OF ANY HORIZONTAL BARS EXCEPT AT CROSSINGS.
4. NO JUNCTION BOXES ARE ALLOWED WHERE VERTICAL REBARS ARE SPACED AT 8" O.C.
5. HORIZONTAL CONDUIT RUNS SHALL BE NOT EXCEED 4'-0".
6. CONDUITS SHALL NOT BE PLACED IN BOND BEAMS.
7. ALL HORIZONTAL CONDUITS SHALL BE A MINIMUM OF 6" AWAY FROM HORIZONTAL BARS.
8. STRUCTURAL ENGINEER RESERVES THE RIGHT TO MODIFY OR RESTRICT THE USE OF THESE RULES BASED ON ACTUAL FIELD CONDITIONS AND QUALITY OF EXECUTION.

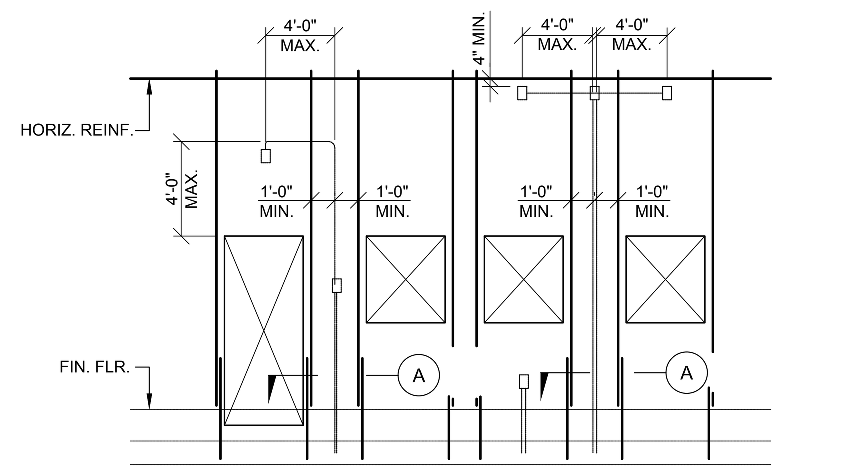

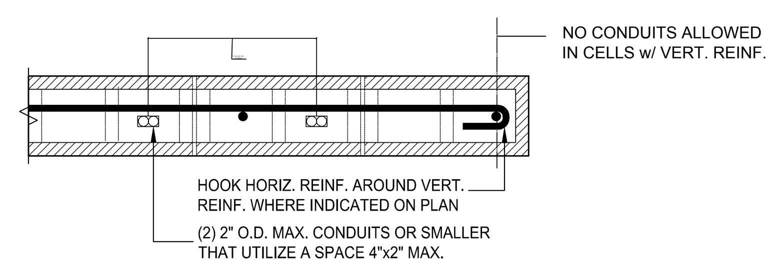

CONDUIT PLACEMENT FOR 8" MASONRY WALLS (A)

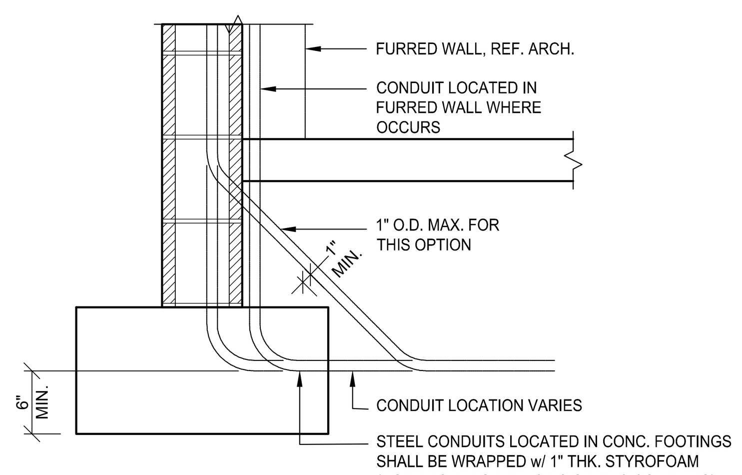

MTL. DECK OVER CMU WALL — SCALE: 3/4"=1'-0" — 6

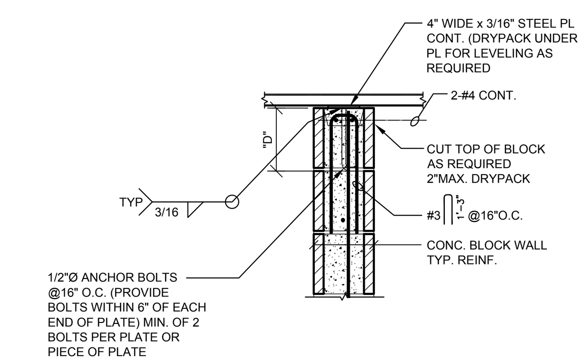

"D" (MIN. EMBEDMENT)	
1/2"Ø	4"
5/8"Ø	4"
3/4"Ø	5"

NOTES:
1. SEE DETAIL 9/- FOR POURING GROUT.
2. SEE 8/S.04 AT EXTERIOR WALL.

CURBS-ON-GRADE — SCALE: N.T.S. — 7

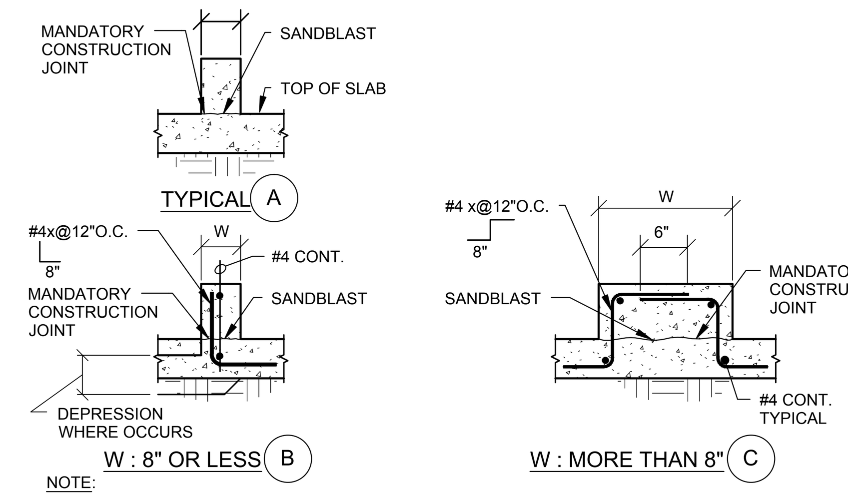

NOTE:
1. COORDINATE WIDTH, HEIGHT AND LOCATION OF CURBS WITH ARCHITECTURAL DRAWINGS.
2. SEE STRUCTURAL SECTIONS FOR CURB REINFORCING AT EXTERIOR WALLS AND SPECIALCONDITIONS.
3. MAX AGGREGATE SIZE = 1"

CONCRETE MASONRY UNIT (CMU) WALLS — SCALE: N.T.S. — 3

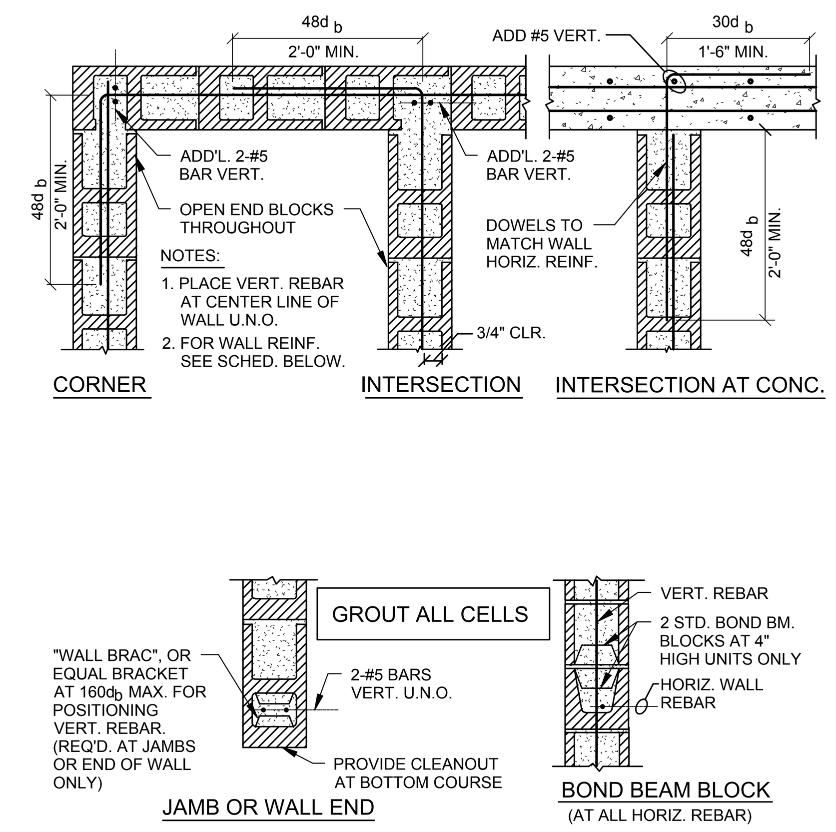

SCHEDULED REINF. SHALL APPLY IN ALL CASES UNLESS NOTED OTHERWISE ON SPECIFIC DETAILS OR SECTIONS.

TYPICAL WALL REINFORCING SCHEDULE			
WALL THICKNESS	VERT. REINF.	HORIZ. REINF.	REMARKS
8"	#5 @16"O.C.	#4 @24"O.C.	℄ WALL

NOTE:
1. WHERE CONDUIT IS REQUIRED IN WALL SEE 11/-
2. NO OTHER CONDUITS ARE ALLOWED IN CMU WALLS WITHOUT PRIOR PERMISSION FROM STRUCTURAL ENGINEER OF RECORD.
3. USE OPEN ENDED BLOCKS AT BOTH ENDS FOR ALL STACK BOND CONDITIONS.

ABBREVIATIONS — SCALE: N.T.S. — 15

(E) - EXISTING
(N) - NEW
A.B. - ANCHOR BOLT
BLKG. - BLOCKING
BM. - BEAM
BOTT. - BOTTOM
BTWN. - BETWEEN
C.P. - COMPLETE PENETRATION
CLR. - CLEAR, CLEARANCE
CMU - CONCRETE MASONRY UNIT
COL. - COLUMN
CONC. - CONCRETE
CONN. - CONNECTION
CONT. - CONTINUOUS
DBL. - DOUBLE
DIAG. - DIAGONAL
DWG. - DRAWING
DC - DEAMND CRITICAL
E.F. - EA. FACE
E.W. - EACH WAY
EA. - EACH
EMBED. - EMBEDMENT
EQ. - EQUAL
EXIST. - EXISTING
FLR. - FLOOR
FTG. - FOOTING
GA. - GAUGE
GLBM - GLULAM BEAM
FTG. - FOOTING
HORIZ. - HORIZONTAL
LLH - LONG LEG HORIZONTAL
LLV - LONG LEG VERTICAL
H.R. - HARD ROCK

HSS-HOLLOW STEEL SECTION
LT.WT. - LIGHTWEIGHT
MAX. - MAXIMUM
MECH. - MECHANICAL
MIN. - MINIMUM
NS/FS - NEAR SIDE/FAR SIDE
NTS - NOT TO SCALE
O.C. - ON CENTER
O.H. - OPPOSITE HAND
OPN'G. - OPENING
OPP. - OPPOSITE
P.P. - PARTIAL PENETRATION
REINF. - REINFORCEMENT
REQ'D. - REQUIRED
SCHED. - SCHEDULE
SHT'G. - SHEATHING
SIM. - SIMILAR
SPECS. - SPECIFICATIONS
SPCG. - SPACING
SQ. - SQUARE
STIFF. - STIFFENER
STL. - STEEL
STRUC. - STRUCTURAL
SYM. - SYMMETRICAL
T&B - TOP AND BOTTOM
THK. - THICK
TOC - TOP OF CONCRETE
TOF - TOP OF FOOTING
TOS - TOP OF STEEL
TYP. - TYPICAL

U.N.O. - UNLESS NOTED OTHERWISE
VERT. - VERTICAL

W/ - WITH
W.P. - WORK POINT
WT. - WEIGHT
WWF - WELDED WIRE FABRIC

DIA. - ROUND
PLATE - PLATE
CLINE - CENTERLINE
L - ANGLE
- POUNDS

LEGEND — SCALE: N.T.S. — 16

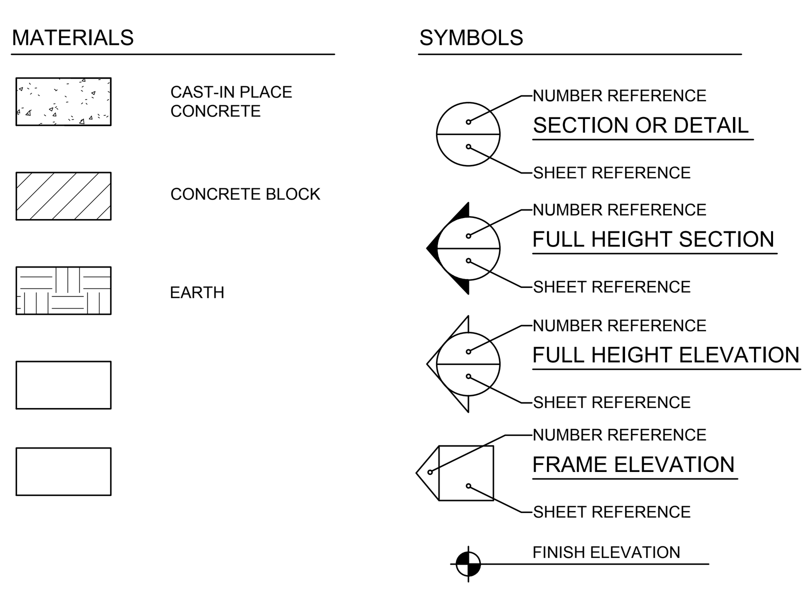

REBAR AT CMU WALL OPENING — SCALE: 3/4"=1'-0" — 8

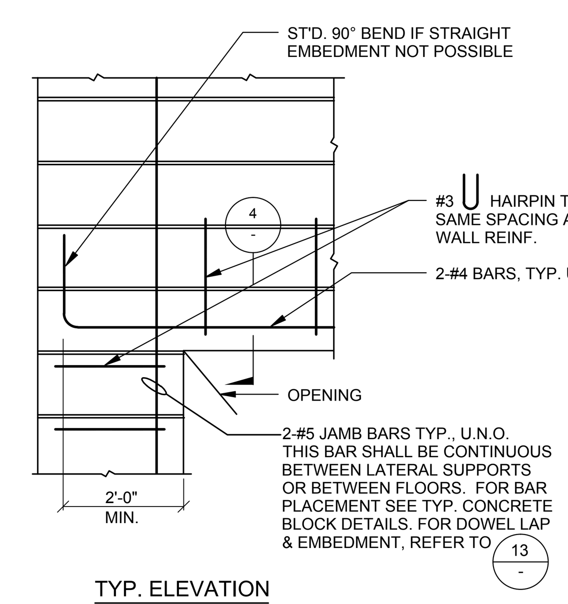

TYP. ELEVATION

REBAR AT CMU WALL OPENING — SCALE: 3/4"=1'-0" — 4

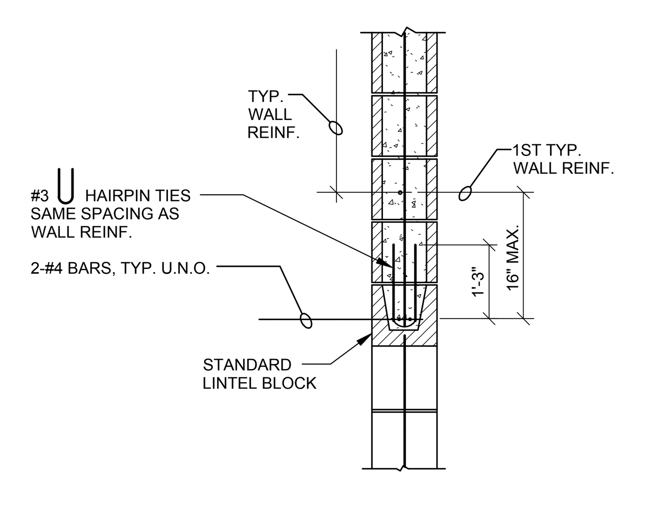

SECTION @ 8" WALL

PROJECT:
CITY OF BEVERLY HILLS
3RD STREET TOUR BUS STATION & RESTROOMS
WEST THIRD STREET, BEVERLY HILLS, CA 90210

OWNER:
CITY OF BEVERLY HILLS
345 FOOTHILL ROAD
BEVERLY HILLS, CA 90210
(T) 310.285.1188

urban-architecture LAB
1657 alvira street second floor los angeles, ca 90035
tel. 323.954.9996 www.u-a-lab.com

© 2016
The design, drawings, and written material in these documents of service are the sole property of Urban Architecture Lab. All design and related information contained herein are for use on the specified projects and shall not be duplicated, disclosed, or used without the prior written consent of Urban Architecture Lab.

PHASE
BID SET
[NOT FOR CONSTRUCTION]
07.12.2018

STAMP:
REGISTERED PROFESSIONAL ENGINEER KIM CARAVALHO No. 4896 STRUCTURAL STATE OF CALIFORNIA
DATE:
FOR BRANDOW & JOHNSTON

BRANDOW & JOHNSTON
STRUCTURAL+CIVIL ENGINEERS (B&J HBK, INC.)
700 S FLOWER ST #1800, LOS ANGELES, CA 90017
T: (213) 596-4500 WWW.BJSCE.COM
EST. 1945

ISSUE NO.	DOCUMENT PACKAGE	ISSUE DATE
1	ADDENDUM #2	07.31.2018

KEY PLAN

N

PROJECT NO.	17006
PLOT DATE	07/31/18
SCALE	AS SHOWN

SHEET TITLE
TYPICAL DETAILS

SHEET NO.
S0.03

CAD REF.

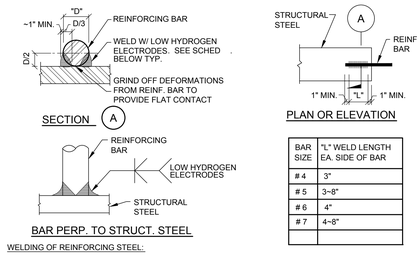

BAR SIZE	"L" WELD LENGTH EA. SIDE OF BAR
# 4	3"
# 5	3~8"
# 6	4"
# 7	4~8"

WELDING OF REINFORCING STEEL:

FIELD WELDING OF REINFORCING SHALL BE PERFORMED BY WELDERS SPECIFICALLY CERTIFIED FOR REINFORCING STEEL. PRIOR TO WELDING, THE "CARBON EQUIVALENT" (CE) OF STEEL SHALL BE DETRMINED. REINFORCING STEEL WHOSE "CE" CANNOT BE IDENTIFIED OR WHOSE "CE" EXCEEDS 0.75% SHALL NOT BE WELDED. EXCEPT FOR REINFORCING STEEL CONFORMING TO ASTM-706, REINFORCING STEEL SHALL NOT BE PRE-HEATED. IN ADDITION, STEEL WITH "CE" BETWEEN 0.66% AND 0.75% SHALL BE WELDED ONLY WHERE PRIOR QUALIFICATION TESTS VERIFY ACCEPTABLE WELDABILITY.

REBAR WELDING | SCALE: N.T.S. | 14

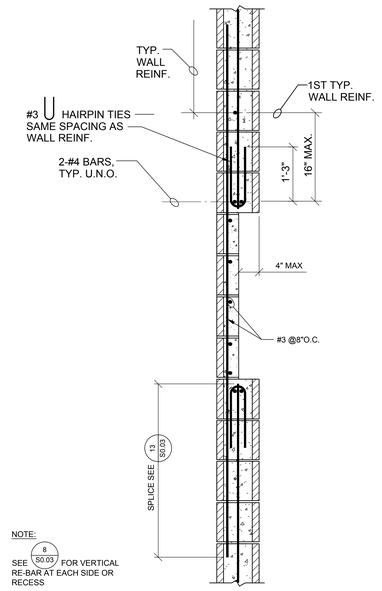

NOTE:
SEE 8 S0.03 FOR VERTICAL RE-BAR AT EACH SIDE OR RECESS

REINFORCEMENT AT RECESS | SCALE: 1"=1'-0" | 10

NOTE:
FOR HORIZONTAL WALL REINFORCING AT CORNERS, REFER TO 8 S0.03 SIM.

MAX 'H'	'B'	BAR Ⓧ
8'-6"	4'-0"	#5 @ 16" OC

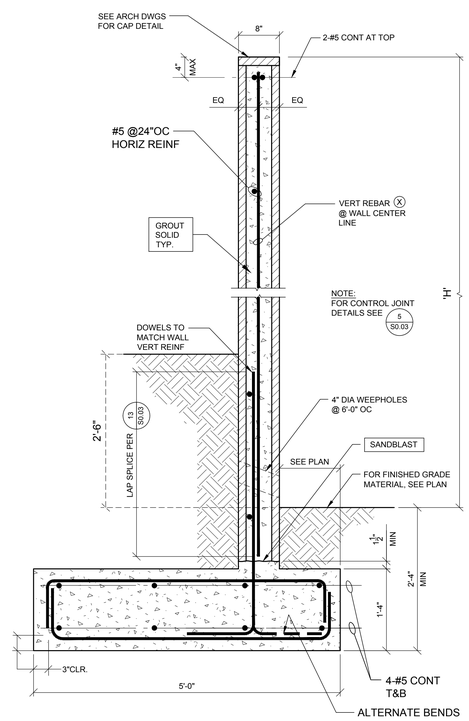

8" FREE STANDING CMU SITE WALL | SCALE: 1"=1'-0" | 6

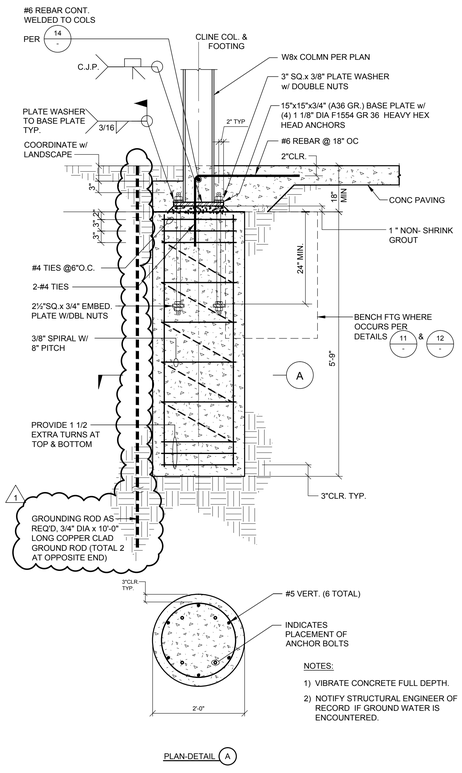

NOTES:
1) VIBRATE CONCRETE FULL DEPTH.
2) NOTIFY STRUCTURAL ENGINEER OF RECORD IF GROUND WATER IS ENCOUNTERED.

POST FOOTING | SCALE: 3/4"=1'-0" | 16

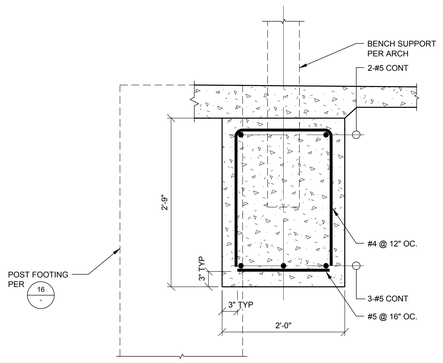

BENCH FOOTING SECTION | SCALE: 1"=1'-0" | 11

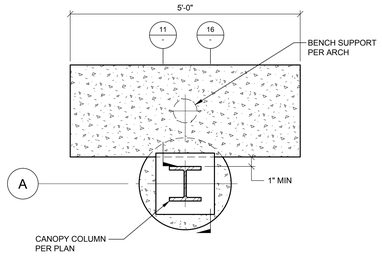

PLAN VIEW

CANOPY COLUMN & BENCH COMBINED FOOTING | SCALE: 3/4"=1'-0" | 12

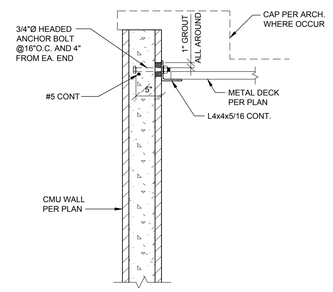

DETAIL | SCALE: 1"=1'-0" | 8

PROJECT:

CITY OF BEVERLY HILLS
3RD STREET TOUR BUS STATION & RESTROOMS
WEST THIRD STREET,
BEVERLY HILLS, CA 90210

OWNER:

CITY OF BEVERLY HILLS
345 FOOTHILL ROAD
BEVERLY HILLS, CA 90210
(T) 310.285.1188

urban-architecture lab
1657 alvira street second floor los angeles, ca 90035
tel. 323.954.9996 www.u-a-lab.com
© 2016
The design, drawings, and written material in these documents of service are the sole property of Urban Architecture Lab. All design and related information contained herein are for use on the specified projects and shall not be duplicated, disclosed, or used without the prior written consent of Urban Architecture Lab.

PHASE

BID SET
[NOT FOR CONSTRUCTION]
07.12.2018

STAMP:

REGISTERED PROFESSIONAL ENGINEER — WAI CARAWALHO — No. 4896 — STRUCTURAL — STATE OF CALIFORNIA

DATE:
FOR BRANDOW & JOHNSTON

BRANDOW & JOHNSTON
STRUCTURAL+CIVIL ENGINEERS (B&J HBK, INC.)
700 S FLOWER ST #1800, LOS ANGELES, CA 90017
T: (213) 596-4500 WWW.BJSCE.COM
EST. 1945

ISSUE NO.	DOCUMENT PACKAGE	ISSUE DATE
1	ADDENDUM #2	07.31.2018

KEY PLAN

PROJECT NO.	17006
PLOT DATE	07/31/18
SCALE	AS SHOWN

SHEET TITLE

TYPICAL CMU & MISC. DETAILS

SHEET NO.

S0.04

CAD REF.

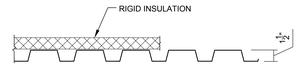

VERCO PLB-36 1 1/2"x16 GA ROOF DECK (ICC ESR-1735P)

DECK ATTACHMENT

A. ATTACHMENT TO FRAMING PERPENDICULAR TO DECK:

HILTI X-ENP-19 L15 FASTENER OR 3/4" DIA. PUDDLE WELD AT EACH FLUTE.

B. ATTACHMENT TO FRAMING PARALLEL TO DECK:

HILTI X-ENP-19 L15 FASTENER OR 3/4" DIA. PUDDLE WELD AT 12" O.C.

C. SIDELAP ATTACHMENT:

VERCO SIDELAP CONNECTION WITH PUNCKLOK TOOL AT 24" O.C. (MAXIMUM).

TYPICAL DECK DETAIL - TYPE 'B' | SCALE: N.T.S. | 1

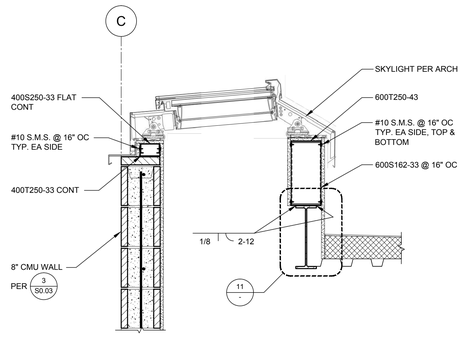

SKYLIGHT DETAIL | SCALE: N.T.S. | 10

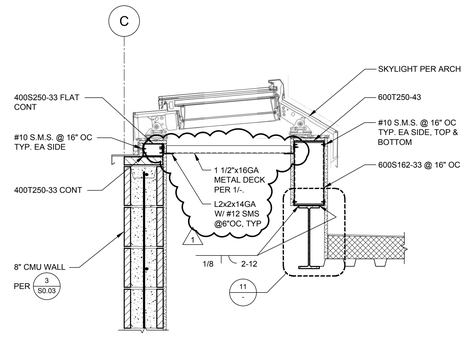

SKYLIGHT DETAIL | SCALE: N.T.S. | 6

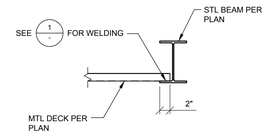

DETAIL | SCALE: 1"=1'-0" | 11

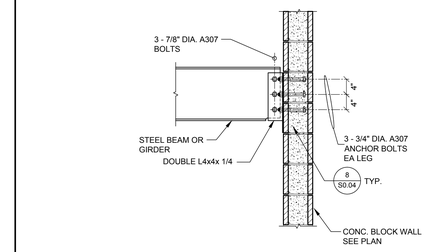

STEEL BEAM TO CMU WALL CONN DETAIL | SCALE: N.T.S. | 7

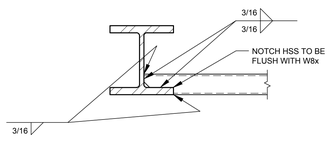

DETAIL | SCALE: N.T.S. | 16

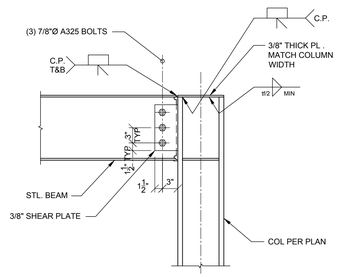

NON-SEISMIC MOMENT CONNECTION (COLUMN FLANGE) | SCALE: N.T.S. | 12

PROJECT:

CITY OF BEVERLY HILLS
3RD STREET TOUR BUS STATION & RESTROOMS

WEST THIRD STREET,
BEVERLY HILLS, CA 90210

OWNER:

CITY OF BEVERLY HILLS

345 FOOTHILL ROAD
BEVERLY HILLS, CA 90210
(T) 310.285.1188

urban-architecture lab
1657 alvira street second floor los angeles, ca 90035
tel. 323.954.9996 www.u-a-lab.com © 2016
The design, drawings, and written material in these documents of service are the sole property of Urban Architecture Lab. All design and related information contained herein are for use on the specified projects and shall not be duplicated, disclosed, or used without the prior written consent of Urban Architecture Lab.

PHASE

BID SET

[NOT FOR CONSTRUCTION]
07.12.2018

STAMP:

REGISTERED PROFESSIONAL ENGINEER
MAY CARAVALHO
No. 4896
STRUCTURAL
STATE OF CALIFORNIA

DATE:
FOR BRANDOW & JOHNSTON

BRANDOW & JOHNSTON
STRUCTURAL+CIVIL ENGINEERS (B&J HBK, INC.)
700 S FLOWER ST #1800, LOS ANGELES, CA 90017
T: (213) 596-4500 WWW.BJSCE.COM
EST. 1945

ISSUE NO.	DOCUMENT PACKAGE	ISSUE DATE
1	ADDENDUM #2	07.31.2018

KEY PLAN

PROJECT NO. 17006
PLOT DATE 07/31/18
SCALE AS SHOWN

SHEET TITLE

TYPICAL STEEL AND METAL DECK DETAILS

SHEET NO.

S0.05

CAD REF.

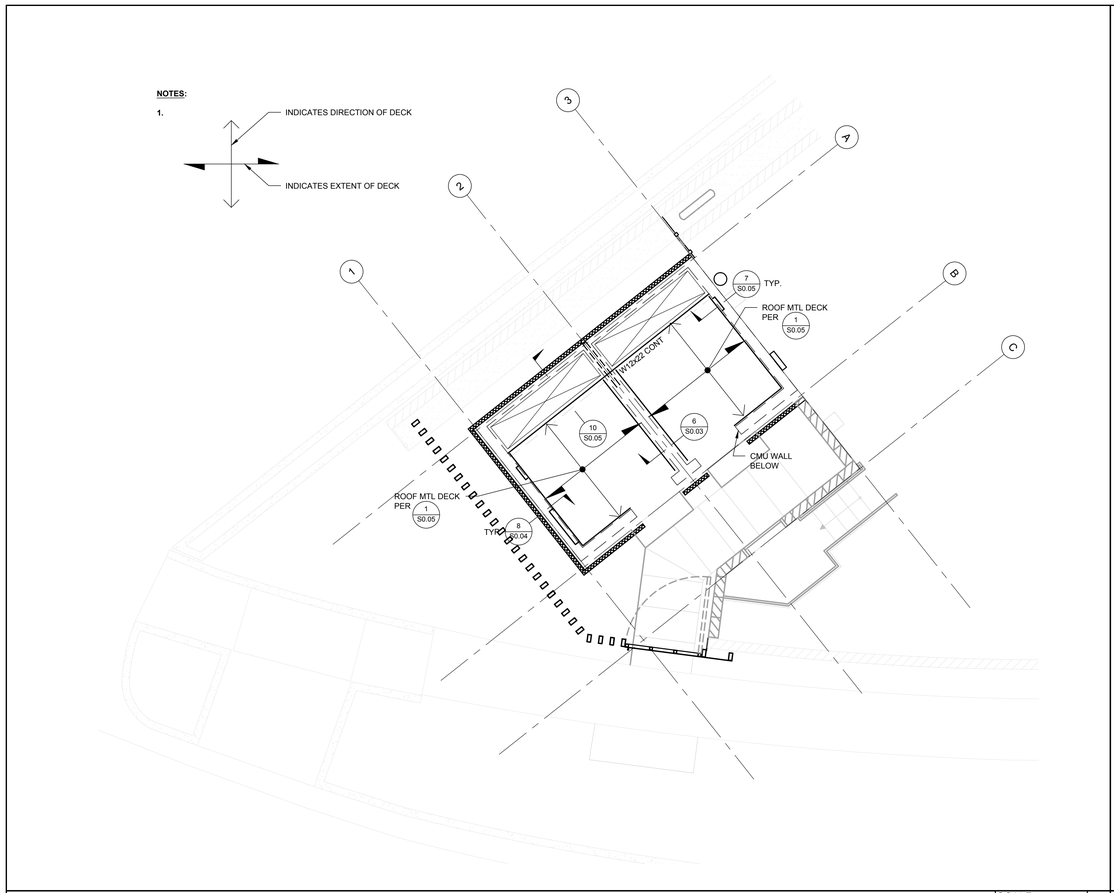

RESTROOMS ROOF PLAN

SCALE 1/4"=1'-0" 10

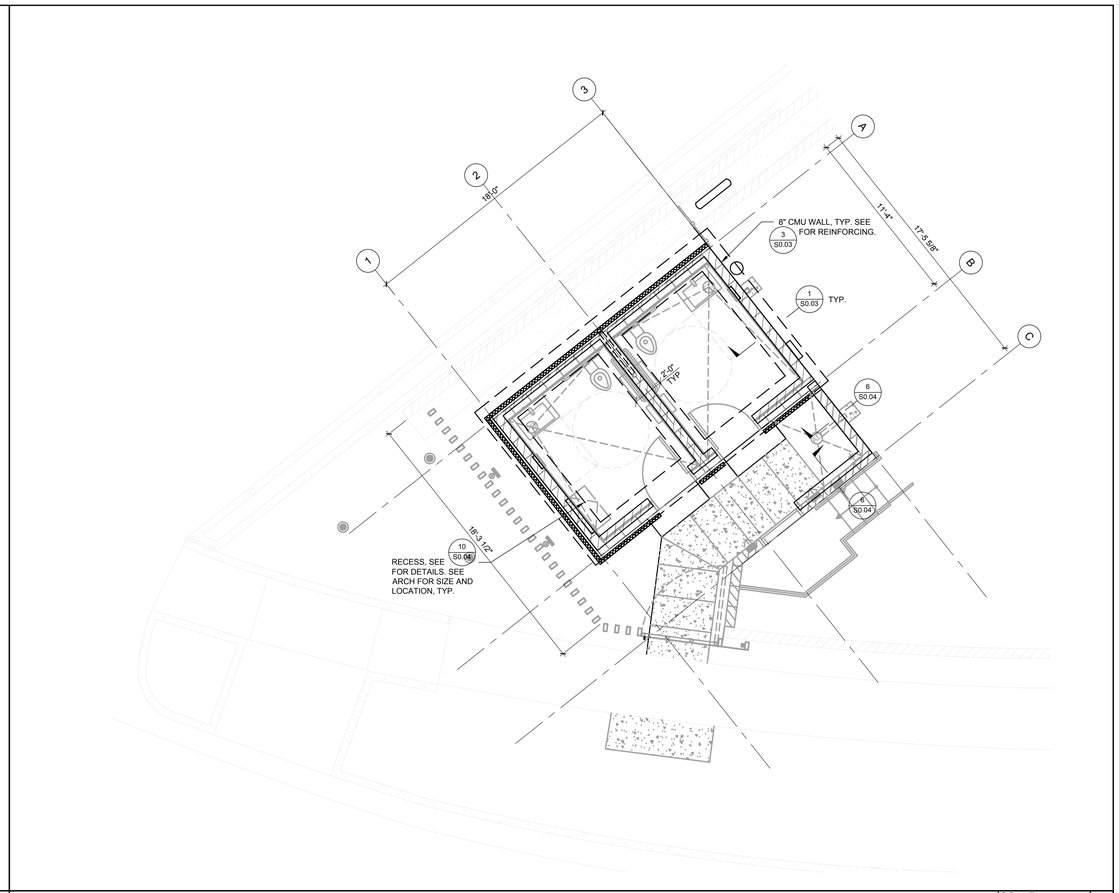

RESTROOMS FOUNDATION PLAN

SCALE 1/4"=1'-0" 2

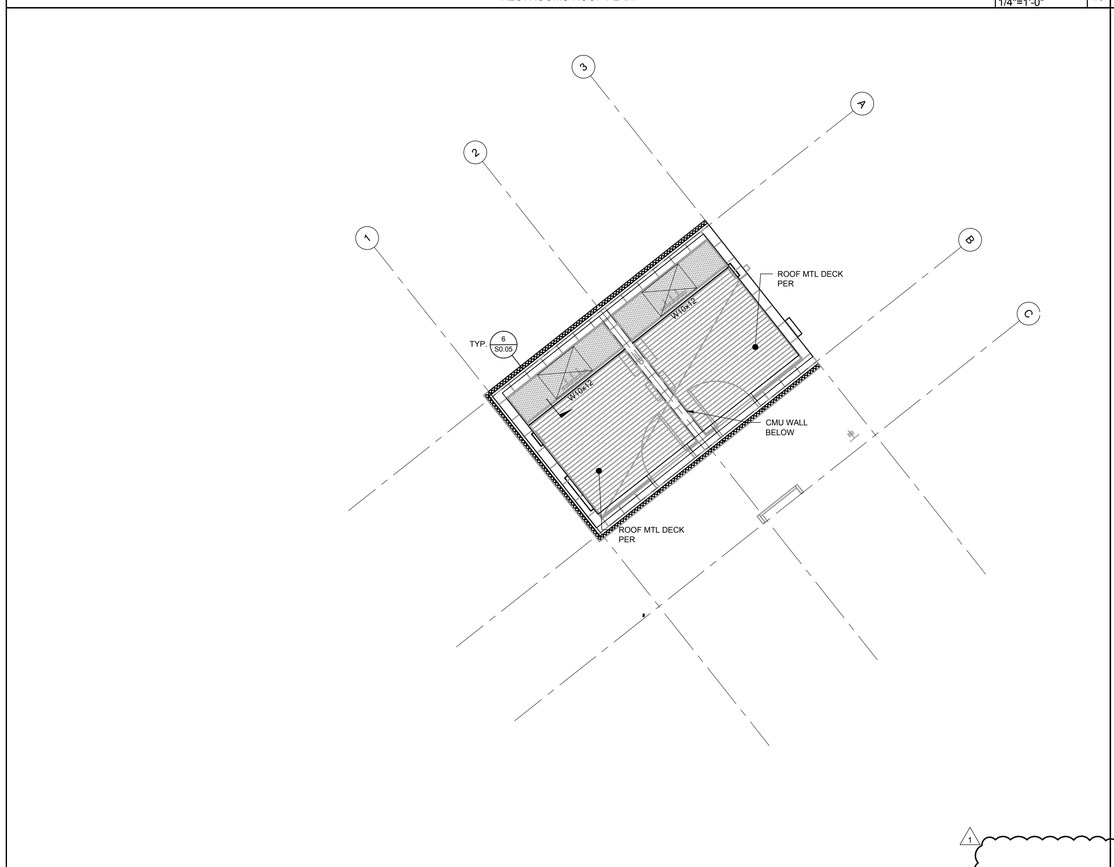

DEDUCT ALTERNATE RESTROOMS ROOF PLAN

SCALE 1/4"=1'-0" 12

PROJECT:

CITY OF BEVERLY HILLS
3RD STREET TOUR BUS
STATION & RESTROOMS
WEST THIRD STREET,
BEVERLY HILLS, CA 90210

OWNER:

CITY OF BEVERLY HILLS
345 FOOTHILL ROAD
BEVERLY HILLS, CA 90210
(T) 310.285.1188

urban-architecture LAB
1657 alvira street second floor los angeles, ca 90035
tel. 323.954.9996 www.u-a-lab.com © 2016
The design, drawings, and written material in these documents of service are the sole property of Urban Architecture Lab. All design and related information contained herein are for use on the specified projects and shall not be duplicated, disclosed, or used without the prior written consent of Urban Architecture Lab.

PHASE

BID SET
[NOT FOR CONSTRUCTION]
07.12.2018

STAMP:

REGISTERED PROFESSIONAL ENGINEER
AIM CARAVALHO
No. 4896
STRUCTURAL
STATE OF CALIFORNIA

DATE:
FOR BRANDOW & JOHNSTON

BRANDOW & JOHNSTON
STRUCTURAL+CIVIL ENGINEERS (B&J HBK, INC.)
700 S FLOWER ST #1800, LOS ANGELES, CA 90017
T: (213) 596-4500 WWW.BJSCE.COM
EST. 1945

ISSUE NO.	DOCUMENT PACKAGE	ISSUE DATE
1	ADDENDUM #2	07.31.2018

KEY PLAN

N

PROJECT NO. 17006
PLOT DATE 07/31/18
0'0"=0'-0"
SCALE AS SHOWN

SHEET TITLE

RESTROOMS FOUNDATION AND ROOF PLANS

SHEET NO.

S1.01

CAD REF.

PLOT DATE: 30/07/2018
CAD FILE: G:\17\1710234 3RD STREET TOUR BUS CANOPY\DRAWINGS\CAD_SHEETS\S1.01 RESTROOMS FOUNDATION AND ROOF PLANS.DWG

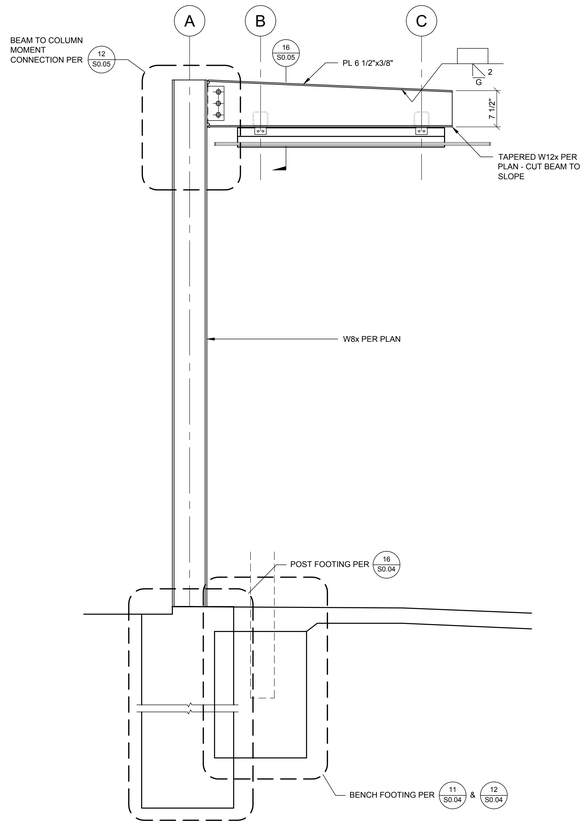

ENLARGED PARTIAL ELEVATION | SCALE: 3/4" = 1'-0" | 2

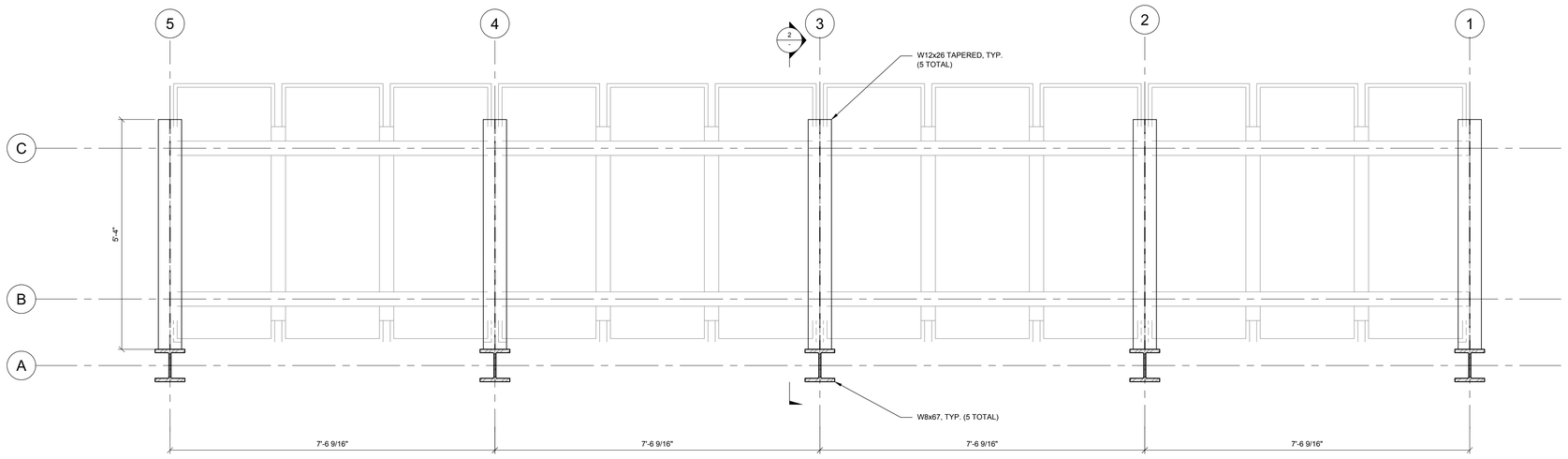

NOTE:

ALL EXPOSED STRUCTURAL STEEL SHALL BE ARCHITECTURAL EXPOSED STRUCTURAL STEEL.

ENLARGED CANOPY ROOF PLAN | SCALE: 3/4" = 1'-0" | 4

PROJECT:

CITY OF BEVERLY HILLS
3RD STREET TOUR BUS STATION & RESTROOMS
WEST THIRD STREET,
BEVERLY HILLS, CA 90210

OWNER:

CITY OF BEVERLY HILLS
345 FOOTHILL ROAD
BEVERLY HILLS, CA 90210
(T) 310.285.1188

urban-architecture lab
1657 alvira street second floor los angeles, ca 90035
tel. 323.954.9996 www.u-a-lab.com
© 2016
The design, drawings, and written material in these documents of service are the sole property of Urban Architecture Lab. All design and related information contained herein are for use on the specified projects and shall not be duplicated, disclosed, or used without the prior written consent of Urban Architecture Lab.

PHASE

BID SET
[NOT FOR CONSTRUCTION]
07.12.2018

STAMP:

REGISTERED PROFESSIONAL ENGINEER
KIM CARAVALHO
No. 4896
STRUCTURAL
STATE OF CALIFORNIA

DATE:
FOR BRANDOW & JOHNSTON

BRANDOW & JOHNSTON
STRUCTURAL+CIVIL ENGINEERS (B&J HBK, INC.)
700 S FLOWER ST #1800, LOS ANGELES, CA 90017
T: (213) 596-4500 WWW.BJSCE.COM
EST. 1945

ISSUE NO.	DOCUMENT PACKAGE	ISSUE DATE
1	ADDENDUM #2	07.31.2018

KEY PLAN

N

PROJECT NO. 17006
PLOT DATE 07/31/18
SCALE AS SHOWN

SHEET TITLE

CANOPY ROOF PLANS AND ELEVATION

SHEET NO.

S2.11

CAD REF.